

Construction Requirements Handbook

Prepared by:

Littleton Electric Light Department

(978) 540 – 2222

2026

Table of Contents

Introduction 4

1. Hours of Operation 4
2. Contacts 4
3. New Construction Requirements 4
4. Easements 5
5. Inspections 6
6. New Construction Specifications 6
7. Metering Requirements 9
8. Temporary Power 11
9. Underground Fed Streetlights 12

Appendix A- 4” Trench Specification 13
Appendix B- 5” Trench Specification 14
Appendix C- Single Phase Transformer Pad Specification 15
Appendix D- Three Phase Pad Specification (≤500kVA) 17
Appendix E- Three Phase Pad Specifications (≥750 kVA) 19
Appendix F- Metering from Padmount Transformer Specifications 21
Appendix G- Single Phase Junction Specifications 22
Appendix H- Three Phase Junction Cabinet Specification 24
Appendix I- Secondary Pedestal Specification 26
Appendix J- Padmount Equipment Clearances 28
Appendix K- Grounding Connectors 29
Appendix L- Single Phase Bollard Specification 30
Appendix M- Three Phase Bollard Specification 31
Appendix N- General Bollard Layout for Padmount Equipment 32
Appendix O- Riser Pole Specification 33
Appendix P- CT Metering Enclosure 35
Appendix Q- Underground Street Lighting Pole Specifications 36
Appendix R – Overhead Service Clearance Guidelines 37
Appendix S - Temporary Service Guidelines 38
Appendix T –Metering Cabinet Vaults 39

Appendix U- Manholes 41
Appendix V – Inspection Checklist 42
Appendix W – Easement Application Form 44

Introduction

The Littleton Electric Light Department (LELD) constructs and maintains electric utilities to the towns of Littleton, Boxborough, and Devens Massachusetts. This booklet is designed to provide you with information regarding the construction requirements that are mandated by LELD. This booklet is not intended to ensure adequacy and safety of the customer's wiring and equipment; such responsibility remains with the customer. LELD does not perform the function of inspecting the customer's wiring regarding the electric code, this function is performed by the local wiring inspector.

LELD's approval of the customers proposed arrangement, installation, and equipment is established by these requirements. These requirements do not relieve the customer from the obligation of complying with all applicable codes, statues, rules or regulations. LELD has the authority to enforce these specifications.

This Construction Handbook may be revised, amended, or improved when necessary and all changes shall supersede any and all previous versions. LELD's Construction Requirements Committee has the responsibility of making interpretations of the rules, deciding on approval of equipment and materials, and granting special permissions contemplated in a number of rules. Please be sure to visit our website, www.lelwd.com, for the most current LELD requirements.

1. Hours of Operation

If any electrical infrastructure construction needs to be inspected by LELD, it must be done during LELD's normal hours of operation. LELD's normal hours of operations are Monday through Thursday, 6:30 a.m. – 4:30 p.m. LELD's operations personnel do not perform nonemergency work in any inclement weather. They also do not work in temperatures below 15ºF or over 90ºF.

2. Contacts

Title	Name	Phone	Email
Electrical Engineer	Catherine Merritt	978-540-2255	cmerritt@lelwd.com
General Line Foreman	Rob Hunt	978-540-2278	rhunt@lelwd.com
Working Foreman	Robert Rooks	978-540-2276	rrooks@lelwd.com
Energy Services & Project Manager	Connor Reardon	978-540-2224	creardon@lelwd.com
Assistant General Manager	David Ketchen	978-540-2254	dketchen@lelwd.com

3. New Construction Requirements

The subsequent procedure is a chronological order of events that must be 100% completed before any service can be energized. This procedure applies to **all 3-phase services, any single-phase service greater than 400A, any single-phase service point with multiple services and any new construction**

containing two or more single-phase service locations. This procedure is non-negotiable and is strictly enforced.

1) Littleton Electric Light Department (LELD) must receive a PE stamped plan that illustrates electric utilities, including poles, trenches, and desired location of transformer pad(s). With these plans, please provide a desired date of power if known.
2) LELD must receive an Electrician Service Application form which can be found on our website, https://www.lelwd.com/electrician-application/. All forms must be completed electronically and submitted online.
3) LELD must receive billing information so that a pre-job estimate can be provided.
4) LELD requires 50% of the estimate be paid up front. Once the payment is received, LELD will procure materials that LELD is responsible for.
5) LELD must receive a registered easement if any LELD owned electric utilities are on private property.
6) LELD will schedule their work once all material have been received into inventory, once all required site work is complete and once all easements have been recorded at the town and county registry of deeds.
7) LELD will conduct a final inspection and create a punch-list if necessary to ensure that the site is safe to be energized. (This inspection is not to take the place of the local wiring inspector)
8) Once all work is complete by LELD, LELD will send a final bill for construction.
9) Upon completion of construction, LELD requires the customer to furnish As-built drawings. LELD requires (2) two hard copies and (1) one electronic copy.
10) LELD must receive an application for all metered service(s).
11) Once the final bill has been paid, LELD will schedule to energize the new service.

Note: LELD may, at their discretion, energize a service or services that meet the criteria before the full completion of a project if it is in LELD's best interest to do so.

4. Easements

In general, LELD-owned equipment shall not be installed on the customer's property prior to the execution of suitable easements. The easements shall be executed by all owners of record for all LELD owned infrastructure located on private property including privately owned roads and ways. The customer will have to complete LELD's easement paperwork located in Appendix W and file at the registry of deeds at no cost to LELD.

5. Inspections

LELD must receive a certificate of inspection from the local wiring inspector and a new service application before LELD will schedule to energize any service. To request an inspection the electrician must first complete LELD's service request form which can be found at www.lelwd.com. Next, the electrician must apply for an electrical permit with its respected local wiring inspector. LELD requires a certificate of inspection for the following:

- All new services
- To re-energize any existing service that has been disconnected or de-energized for construction, an emergency, duration exceeding twelve months, or when the wiring system is replaced, altered or extended.

6. New Construction Specifications

All work shall be in accordance with these standards, the National Electric Safety Code, The National Electric Code and state and local requirements as applicable. Additional specifications, when required shall be furnished by LELD and will be identified in the cost estimate and scope of work.

a. Approval of all construction completed by the customer shall be obtained from LELD, including approval of plans before construction and approval of grounding installation prior to backfilling. Plans shall show location of transformer pad(s), metering equipment, and conduit type, size, number, and location.
b. All new developments and commercial/ industrial buildings shall be constructed with underground feeders unless approved by LELD. When possible, underground systems shall be constructed as a loop feed.
c. Three phase transformer pads shall be furnished by the customer and installed by the contractor. Three phase transformer pads shall be precast concrete as specified in Appendix D and Appendix E. Once the transformer has been sized for the project, LELD shall inform the customer of the required part number to order from Shea Concrete. Precast transformer pads from other manufactures must be submitted for approval by
LELD Engineering before installation. The transformer pad must be level at the time of energization. If the pad is not level it is the contractor's responsibility to take necessary steps to re-level the pad.
d. Single phase transformer pads shall be purchased by the customer from LELD. LELD will provide the pads for the contractor to pick up at our facility.
e. All junction cabinet pads and pad mounted equipment require a minimum of 6" of crushed rock beneath structure. Crushed stone beneath three phase transformer pads must be mechanically compacted. Specification sheets for LELD supplied transformer pads have been provided in the attached appendices.

f. Install #2 (or larger) s.d. 7 strand bare-copper-wire loop 1'-0" below grade. Bond to all exposed non-PVC conduit and leave 3'-0" of wire above pad for grounding transformer at two opposite points in the cable conduit openings. Use phos-copper braze connections or two approved connections per joint (see Appendix K). Install two 8' galvanized-steel (5/8") or copper-clad-steel ground rods. Leave grid exposed until inspected by a representative from LELD.
g. Prior to installation, edge of roadway and final grade must be clearly marked and remain marked through the duration of construction and inspections.
h. All primary conduits will be furnished and installed by the customer. When attaching primary conduit to the utility pole, standoff hardware (provided by LELD) must be installed by contractor. The 90˚ sweep and first ten-foot section of conduit above grade shall be constructed of fiberglass. All 90˚ sweeps shall be long radius (minimum 48"). LELD will specify the type of conduit to be used for each specific installation.
i. LELD recommends that the customer's conductors from the service point to the main service equipment be sized to limit voltage drop to 1%. Normally, LELD's voltage range is ±5% of the nominal voltage. It is the customer's responsibility to maintain adequate voltage beyond this point.
j. LELD's overhead service line conductors must comply with the clearance requirements of the National Electrical Safety Code and LELD's construction standards. The customer's service bracket, located near the point of attachment, must be installed in such a location to allow for minimum clearance of overhead service line conductors to be met. Placement of swimming pools under existing overhead service line conductors is prohibited.
k. When installing conduit underground, the following minimum horizontal clearances must be maintained:
   a. 5' from gas infrastructure
   b. 5' from water infrastructure
   c. 5' from drainage or sewer infrastructure
   d. 5' from building foundations
   e. 12" from communication infrastructure
l. For underground three phase secondary services, conductors and connectors shall be furnished by the customer, including terminal connectors for connecting to transformer spades. Terminal connectors shall be compression lugs with standard NEMA 2 Hole configuration. Mounting hardware shall be 1/2" stainless steel bolts, stainless steel lock washers, with bronze nuts. All hardware shall be installed per the manufacturer's instructions with the manufacturer's specified tooling. Connections shall be pre-approved by LELD in order to avoid any unnecessary delays. Final secondary connections at the transformer shall be made by the customer.
m. All primary conductors will be installed and terminated at the transformer by LELD.
n. LELD requires the following clearances around all three-phase pad mounted equipment: a. Back- 6 ft of clearance
   b. Left and Right side- 3 ft of clearance
   c. Front- 12 ft of clearance

LELD also requires that all LELD owned structures are to be installed 3' off the side of the road. These are LELD requirements, and it is important to check with the current building codes to ensure further clearance is not necessary.

o. Bollard protection around LELD infrastructure may be required in order to ensure proper protection. Bollard placement will be determined by LELD prior to installation. Bollard must be finished with a highly visibility color. The single-phase bollard specification can be found in Appendix L and the three-phase bollard specification can be found in Appendix M.
p. All primary conduit banks shall be located to allow for future access. Primary conduit locations need to be pre-approved by LELD.
q. LELD's standard connector for underground single-phase services range from #10-350MCM AL/CU conductors.
r. LELD reserves the right to charge developers for extra work including but not limited to extra or repeat trips due to conduit damage, incorrect/improper conduits, transformer pad installations, or other damage by the contractor(s).
s. Transformer pads, meter vaults, and switch pads are not to be filled with stone.

Single Phase Trenching Specifications

a. The contractor will be responsible to furnish and install two 4" conduits.
b. Conduit should be a minimum of 36" below final grade and the trench shall be a minimum of 36" wide. A trench specification sheet has been provided in Appendix A.
c. The conduit shall be backfilled using a good grade of sand, with no stones.
d. An electric-warning tape will be applied above the conduit 12" below finished grade.
e. A nylon string of at least 200# tensile strength will be supplied in each conduit.
f. Conduit passing under roadways or areas designed for vehicular traffic must be concrete encased. Conduit that is not under roadways must be a minimum of schedule 40 PVC. On a case-by-case basis, the LELD at its discretion may determine alternative methods.
g. Each conduit end shall be covered and tagged from origin.
h. LELD requires 45˚ bends where conduit enters transformer pads, switch vaults and metering vaults.
i. LELD requires all conduit ends having bell ends.

Three Phase Trenching Specifications

a. The contractor will be responsible to furnish and install two 5" conduits.
b. Conduit should be a minimum of 36" below final grade and the trench shall be a minimum of 36" wide. A trench specification sheet has been provided in Appendix B.
c. The conduit shall be backfilled using a good grade of sand, with no stones.
d. An electric-warning tape will be applied above the conduit 12" below finished grade.
e. A nylon string of at least 200# tensile strength will be supplied in each conduit.

f. Conduit passing under roadways or areas designed for vehicular traffic must be concrete encased. Conduit that is not under roadways must be a minimum of schedule 40 PVC. On a case-by-case basis, the LELD at its discretion may determine alternative methods.
g. Each conduit end shall be covered and tagged from origin.
h. LELD requires 45˚ bends where conduit enters transformer pads, switch vaults and metering vaults
i. LELD requires all conduit ends having bell ends.

7. Metering Requirements

This section of the handbook outlines the LELD metering specifications and installation requirements for all residential, commercial and industrial metered service locations.

For questions regarding LELD's photovoltaic interconnection process, requirements and rates, please visit our website or contact our Energy Services and Project Manager.

Single Phase Electric Service- General Requirements

a. All meters will be furnished by LELD and shall be installed on meter sockets provided and wired by the customer.
b. All metering equipment must be on the outside of the building/house, in a location where they can be easily accessed 24/7.
c. All meter sockets will be mounted in readily accessible locations within 50' of a driveway or sidewalk, and placed so that the center-line of the meter face is between 42" and 66" above finished grade. All meter locations must be approved by LELD prior to installation. All metering equipment must be mounted a minimum of 3' from any door, window, gas meter, propane storage tank or other identified hazard. All metering equipment must have a minimum of 3' of clear space in front of the face of the equipment to allow for maintenance.
d. For multi-meter installations, all sockets must be permanently and indelibly marked with an address, unit number, or physical description of the service.
e. Required disconnects and metering equipment for distributed generation must be located within plain sight of existing revenue meter.
f. Single phase services over 400 amps will be required to meet the metering standards for 3 phase services 301 amps or larger (see below).

Three Phase Electric Service – General Requirements

a. All metering shall be hot sequence, unless LELD determines cold sequence is acceptable.
b. The preferred location for all meters and metering equipment shall be on the exterior of the building. Alternatively, and with prior written approval of LELD, metering equipment may be installed in a designated electrical room provided that the electrical room can be accessed from

the exterior of the building and that LELD is given a key to the electrical room door and granted perpetual access to the electrical room.

c. All meter sockets will be mounted in readily accessible locations within 50' of a driveway or sidewalk, and placed so that the center-line of the meter face is between 42" and 66" above finished grade. All meter locations must be approved by LELD prior to installation. All metering equipment must be mounted a minimum of 3' from any door, window, gas meter, propane storage tank or other identified hazard. All metering equipment must have 3' of clear space in front of the face of the equipment to allow for maintenance.
d. All metering cabinets must be NEMA 3R (rain tight) minimum, with hinged doors and factory installed locking provisions. All metering cabinets shall be mounted with the top surface between 60" and 72" above finished grade. All metering cabinet locations must be approved by LELD prior to installation.
e. Any customer installed conduits for metering purposes shall be minimum 1 ¼" for runs of 20' or less. For runs between 20' and 100' the conduit shall be 1 ½". The distance between the CT location and meter socket shall not exceed 100'. Rigid steel conduit must be used in any exposed locations. No junction boxes will be accepted in any metering conduit.
f. All hardware, structures, pedestals, and accessories used to support metering equipment must be appropriate for the location and purpose to ensure longevity of the installation.
g. All 3 phase metering installations must be preapproved by LELD.
h. Metering equipment located in areas exposed to vehicular traffic or other hazards shall be protected by appropriate barriers or bollards as deemed necessary by LELD.
i. In addition to LELD requirements, all metering installations must comply with current NEC and NESC requirements.
j. For multi-meter installations, all sockets must be permanently and indelibly marked with an address, unit number, or physical description of the service.
k. Three-Phase Service. Three phase secondary service is supplied at 208Y/120V (up to 400 amps for aerial), 4 wire, 60Hz, AC.

Service Specific Requirements

a. **120/208 Volts 300 Amps or less;** Customer will provide and install an appropriate 7 terminal meter socket with a lever operated bypass switch and ringless cover. For safety and reliability LELD does not use self-contained metering above 120/208v 300 amps.

b. **120/208 Volts 301 Amps – 999 Amps;** LELD will provide an appropriate meter enclosure at the customer's expense. Customer will be responsible for mounting the meter enclosure in an approved location, either on the building or on a suitable pedestal. (No meter sockets will be mounted directly on the transformer). The CT metering cabinet drawing can be found in attached Appendix P. Alternatively, and with prior approval, a CT compartment in the main switchgear will be allowed providing that it meets all of the general requirements above. LELD will provide an appropriate meter socket, at the

customer's expense. The customer will be responsible for the installation of the meter socket in an LELD approved location and the conduit between the socket and CT cabinet. LELD will provide and install the CT's and all associated wiring, at the customer's expense.

c. **120/208 Volts 1000 Amps – 3999 Amps;** CT's will be placed in the secondary compartment of the transformer. LELD will provide an appropriate meter socket at the customer's expense. Customer will be responsible for mounting meter socket in an approved location, either on the building or on a suitable pedestal. (No meter sockets will be mounted directly on the transformer) Conduit shall be installed between the secondary section of the transformer pad and the meter socket. LELD will provide and install CT's and all wiring for the meter installation at the customer's expense.

d. **277/480 Volt 999 Amps or less;** LELD will provide an appropriate meter enclosure at the customer's expense. Customer will be responsible for mounting the meter enclosure in an approved location, either on the building or on a suitable pedestal. Alternatively, and with prior approval, a CT compartment in the main switchgear will be allowed providing that it meets all of the general requirements above. LELD will provide an appropriate meter socket at the customer's expense. The customer will be responsible for the installation of the meter socket in an LELD approved location and the conduit between the socket and CT cabinet. LELD will provide and install the CT's and all associated wiring at the customers expense. LELD does not allow any self-contained 277/480V metering.

e. **277/480 Volts 1000 Amps – 3999 Amps;** CT's will be placed in the secondary compartment of the transformer. LELD will provide an appropriate meter socket at the customer's expense. Customer will be responsible for mounting meter socket in an approved location, either on the building or on a suitable pedestal. (No meter sockets will be mounted directly on the transformer) Conduit shall be installed between the secondary section of the transformer pad and the meter socket. LELD will provide and install CT's and all wiring for the meter installation at the customers expense.

f. **120/208 or 277/480 Volts 4000+ Amps;** All services 4000 amps or more shall be primary metered. All equipment will be specified, provided and installed by LELD at the customers expense.

8. Temporary Power

a. Applicable to the Towns of Littleton and Boxborough for construction, renovation, or any temporary event (including temporary to permanent). All applications and notices to

discontinue service must be received in person or in writing at least two business days in advance.

b. All temporary services must be installed by a licensed electrician and inspected by the local wiring inspector.
c. Service provided will be 120/240 volt, three wire, single phase, 60 Hz a.c. All electricity used will be billed under the non-residential, business, small commercial, and small industry Rate 20 (see rates at www.lelwd.com).
d. LELD charges a non-refundable fee ($250.00) for single-phase temporary meter locations within 100 feet of the existing distribution system. For single-phase temporary services over 100 feet, and all three-phase temporary services, actual cost of materials will be charged.
e. For three-phase service requiring poles to be set, or other investment, an additional jobbing charge equivalent to the cost of labor and materials will be charged. An advanced payment may be required that will be applied to the resulting jobbing charge.
f. No permanent service shall be furnished until full payments of all LELD charges have been received.

9. Underground Fed Streetlights

a. Municipal street light quantities and locations shall be determined by the Planning Board or Police Department and shall be discussed and shown on all site drawings.
b. Private street lights shall be billed in accordance with LELD Rate 80, filed with the Mass DPU.
c. Underground fed streetlight infrastructure shall be initially furnished and installed by the customer. Streetlight poles shall be purchased from LELD. The customer shall perform all civil work required to install the trench, conduit, foundations and pole and associated material for underground fed street lighting. All installations must be inspected by LELD before completion.
d. Streetlight poles must be directly embedded into ground 3 feet per manufactures installation instructions. Installation drawings can be found in Appendix Q.
e. Upon acceptance of streetlight conduit and pole installation, LELD shall install the light fixture, photocontrol and wire. At this time, LELD assumes exclusive control of the underground street lighting system.
f. Underground streetlight conduit shall be 2” PVC Sch. 40 with minimal bends.
g. Conduits shall have a minimum of 24” of cover.

Appendix A- 4” Trench Specification

Concrete Encased Conduit

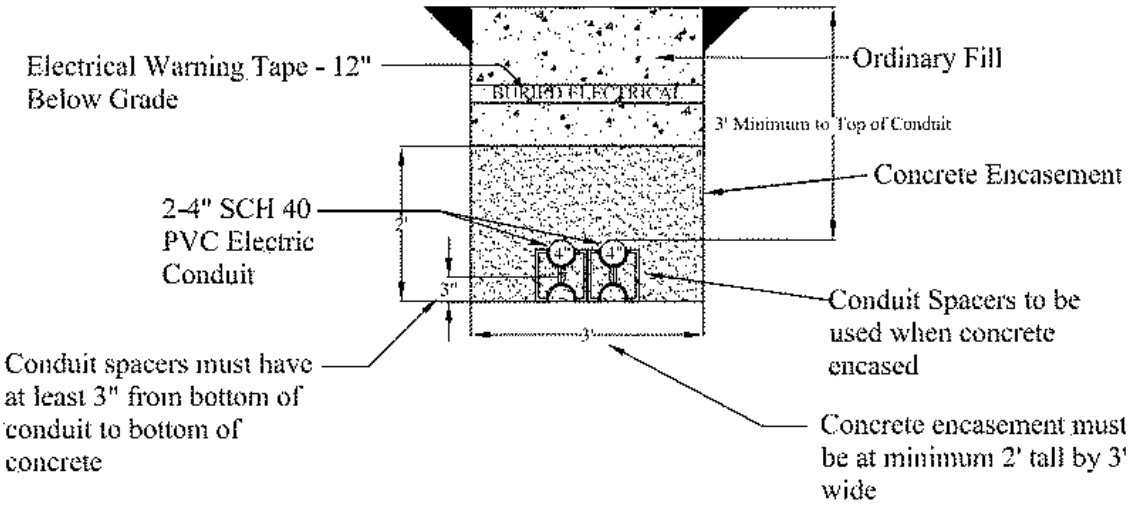

Conduit in Compacted Sand

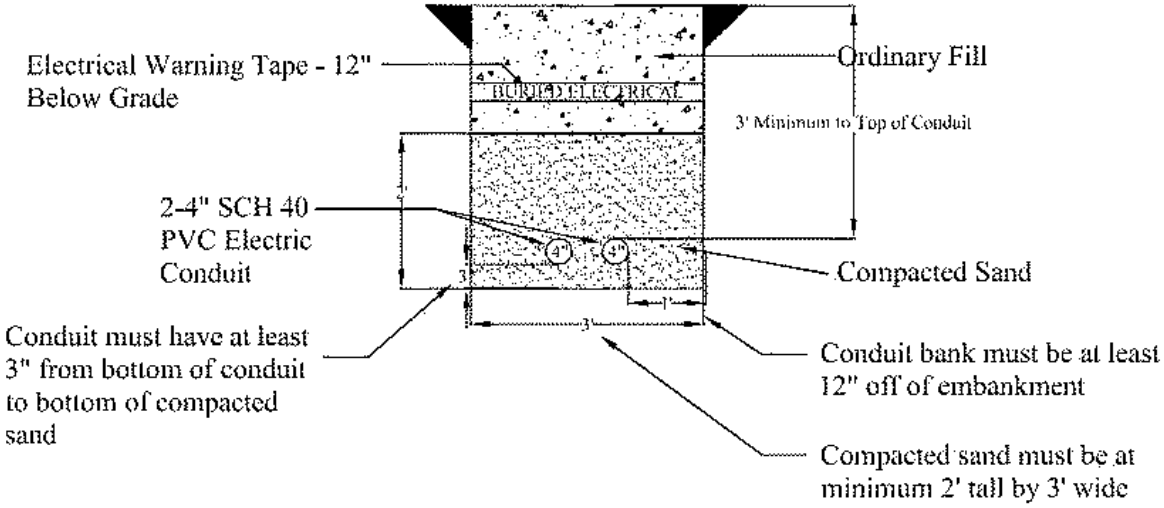

Note: Under a traveled way, conduit bank to be concrete encased using 2500 PSI mix with a minimum cover of 6"

Appendix B- 5” Trench Specification

Concrete Encased Conduit

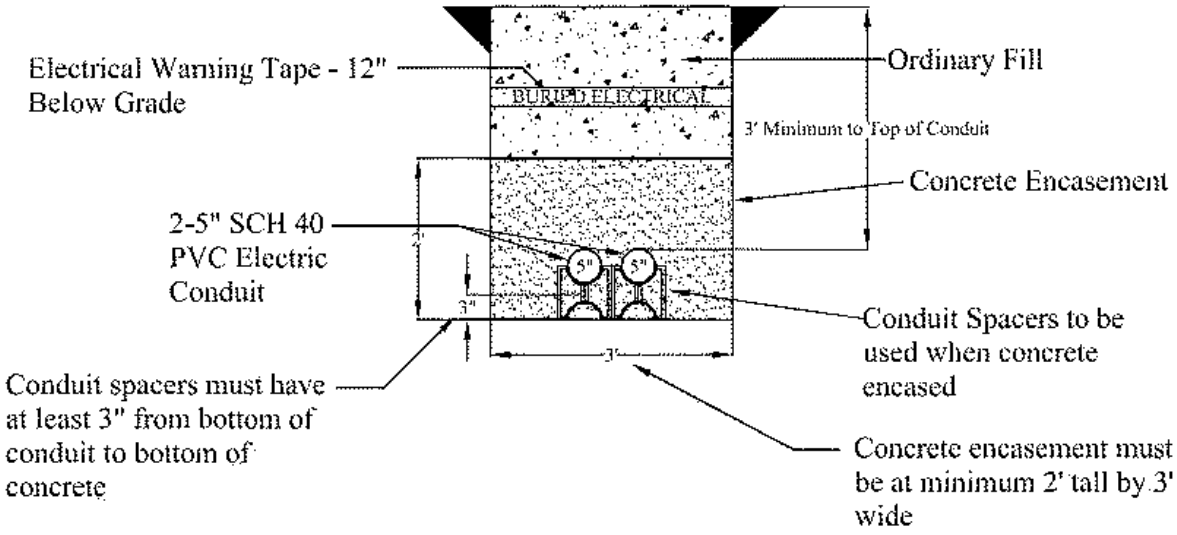

Conduit in Compacted Sand

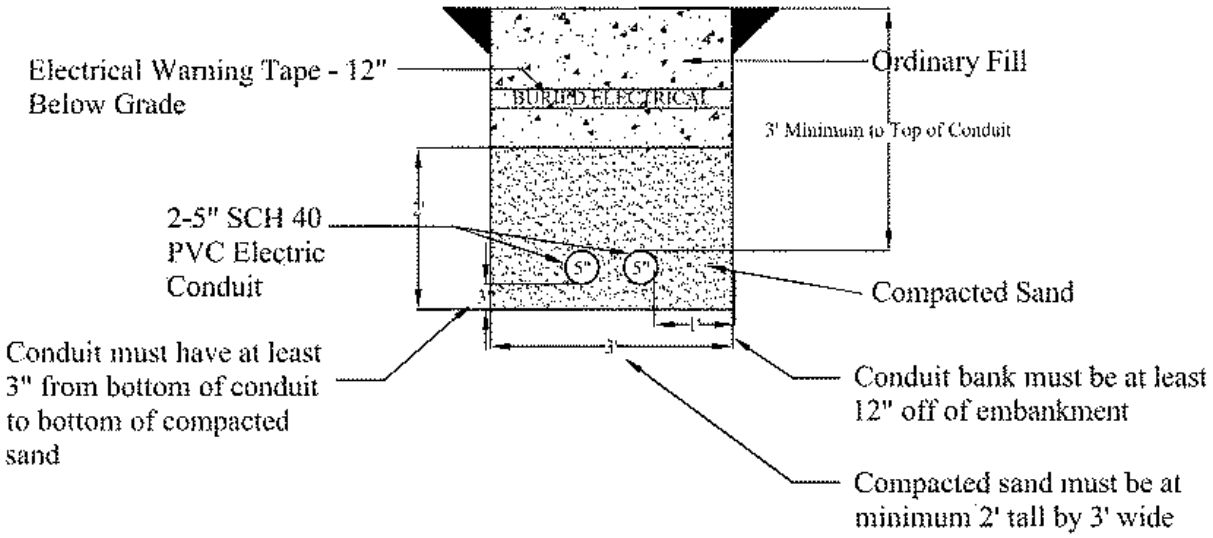

Note: Under a traveled way, conduit bank to be concrete encased using 2500 PSI mix with a minimum cover of 6"

Appendix C- Single Phase Transformer Pad Specification

LITTLETON ELECTRIC LIGHT DEPARTMENT
TRANSFORMER BOX PAD - SINGLE PHASE TRANSFORMERS

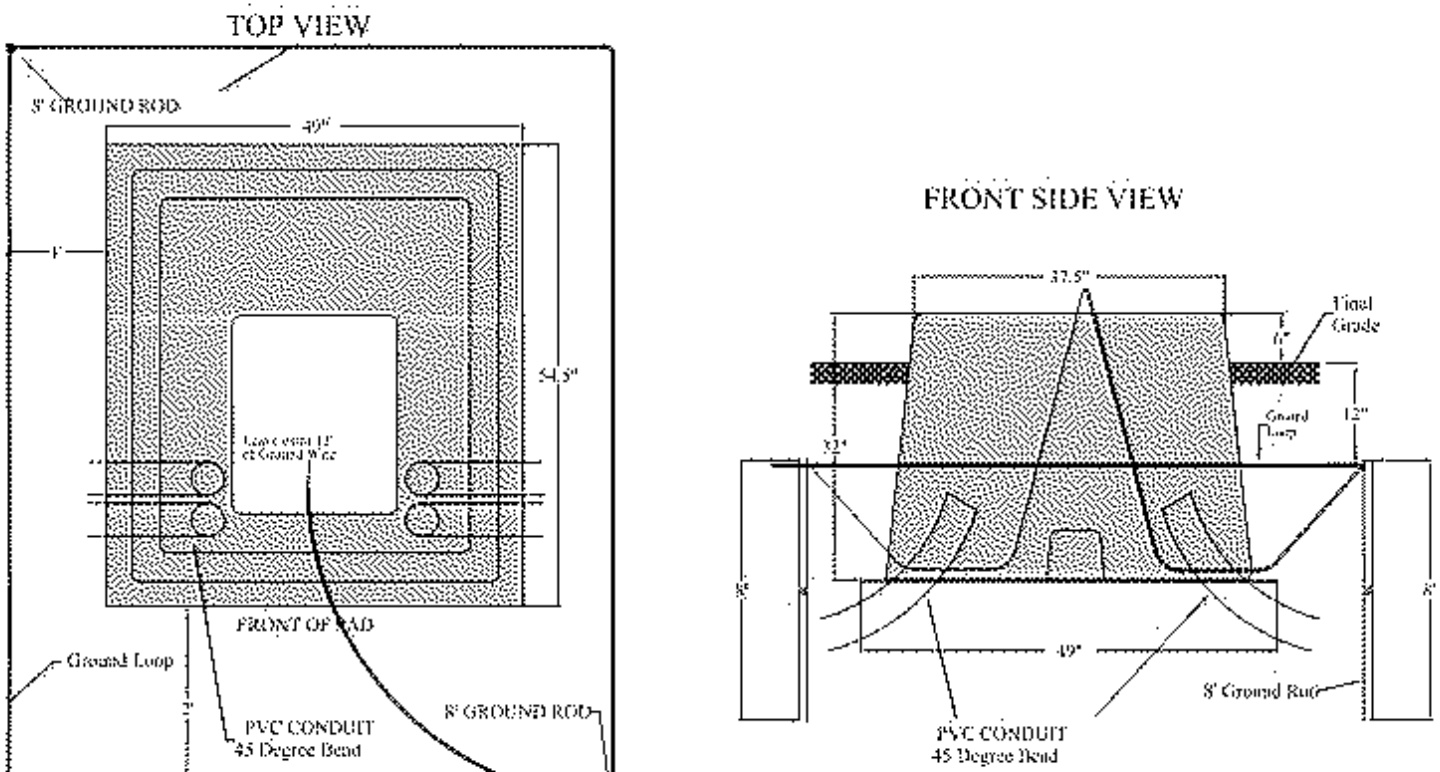

Ground Grid: Install #2 7 strand bare copper wire loop 12" below grade.
Bond to 2 ground rods and leave extra 12' tail of ground wire from ground rods.

Cadweld connection or two approved connectors per joint.
Install 2 - 8' galvanized steel or copper coated 5/8" ground rods.

Leave grid exposed until inspected by LELD.

DO NOT DRILL ANY HOLES INTO PAD

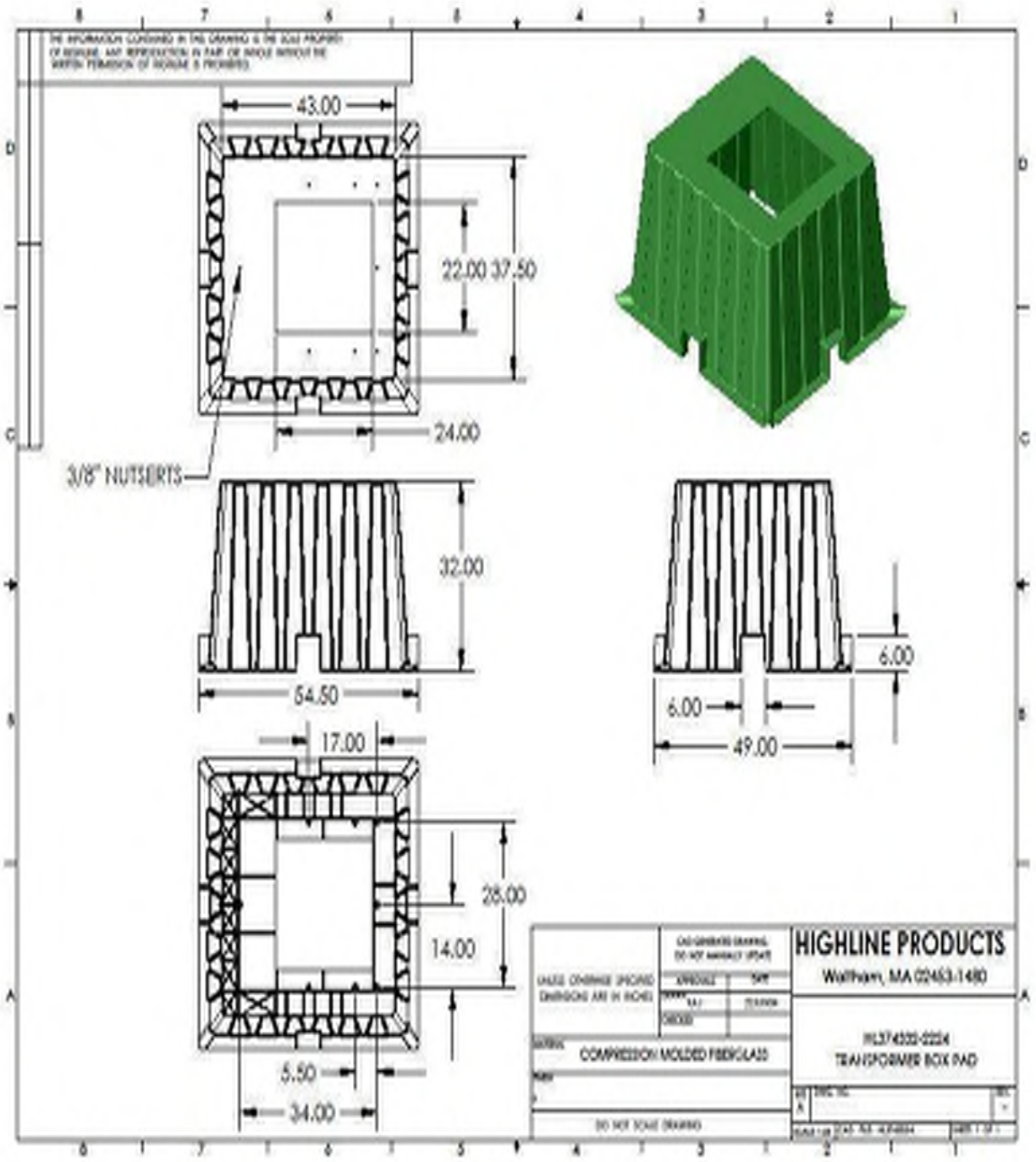
43.00
22.00
37.50
24.00
3/8" NUTSERTS
32.00
54.50
17.00
28.00
14.00
5.50
34.00
6.00
6.00
49.00
HIGHLINE PRODUCTS
Waltham, MA 02453-1480
COMPRESSION MOLDED FIBERGLASS
TRANSFORMER BOX PAD

Appendix D- Three Phase Pad Specification (≤500kVA)

LITTLETON ELECTRIC LIGHT DEPARTMENT
TRANSFORMER PAD - THREE PHASE PRECASE CONCRETE

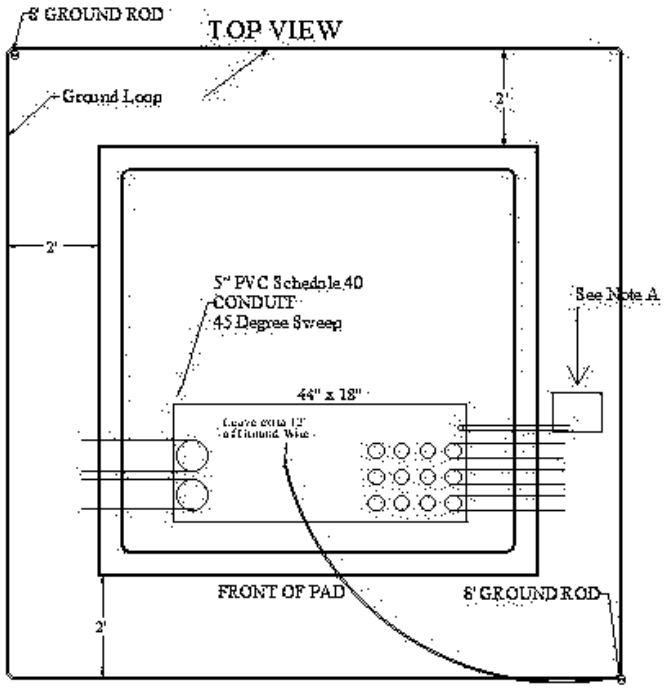

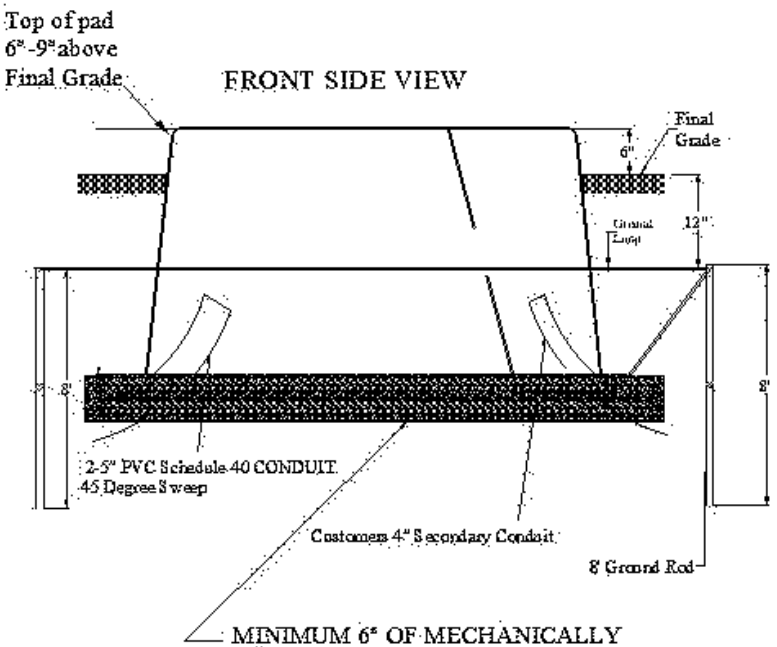

Ground Grid: Install #2 7 strand bare copper wire loop 12" below grade.
Bond to 2 ground rods and leave 16' tail of ground wire from ground rods.

Cadwell connection or two approved connectors per joint.
Install 2 - 8' galvanized steel or copper coated 5/8" ground rods.

Leave grid exposed until inspected by LELD.

Note A

Refer to "Appendix F" for meter metering specifications when CT's are mounted in secondary cabinet of transformer.

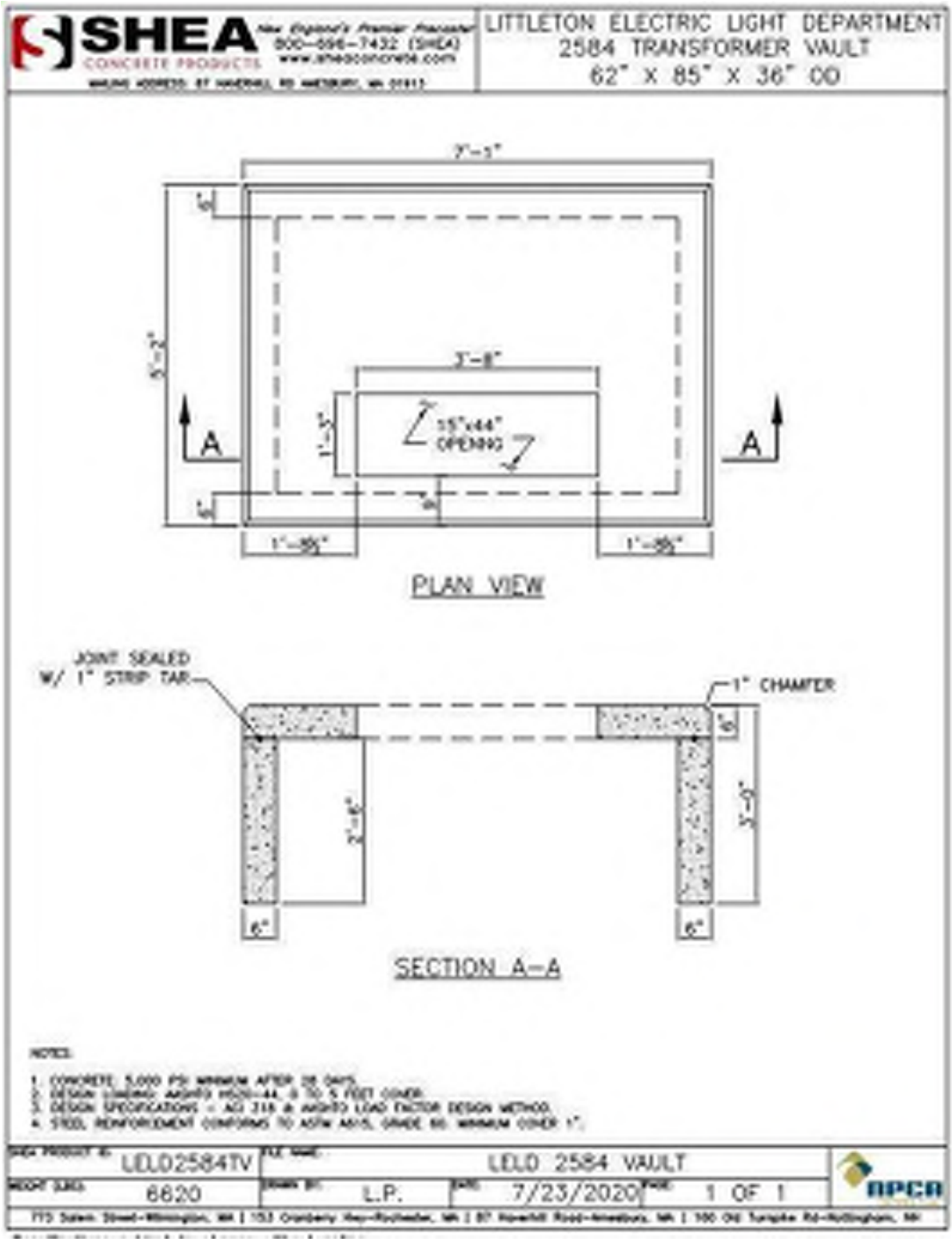
SHEA
CONCRETE PRODUCTS
New England's Premier Precaster
800-696-7432 (SHEA)
www.sheaconcrete.com
LITTLETON ELECTRIC LIGHT DEPARTMENT
2584 TRANSFORMER VAULT
62" X 85" X 36" OD
7'-1"
3'-8"
15"x44" OPENING
A
A
PLAN VIEW
JOINT SEALED W/ 1" STRIP TAR
1" CHAMFER
6"
6"
SECTION A-A
NOTES:
1. CONCRETE: 5,000 PSI MINIMUM AFTER 28 DAYS.
2. DESIGN LOADING: AASHTO HS20-44, 0 TO 5 FEET COVER.
3. DESIGN SPECIFICATIONS - ACI 318 & AASHTO LOAD FACTOR DESIGN METHOD.
4. STEEL REINFORCEMENT CONFORMS TO ASTM A615, GRADE 60. MINIMUM COVER 1".
LELD2584TV
LELD 2584 VAULT
6620
L.P.
7/23/2020
1 OF 1
APCA

LITTLETON ELECTRIC LIGHT DEPARTMENT
TRANSFORMER PAD - THREE PHASE PRECASE CONCRETE

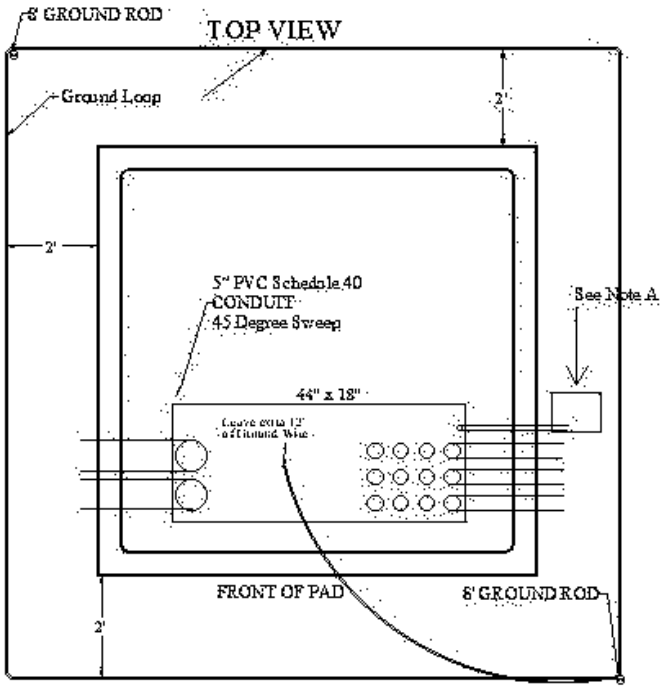

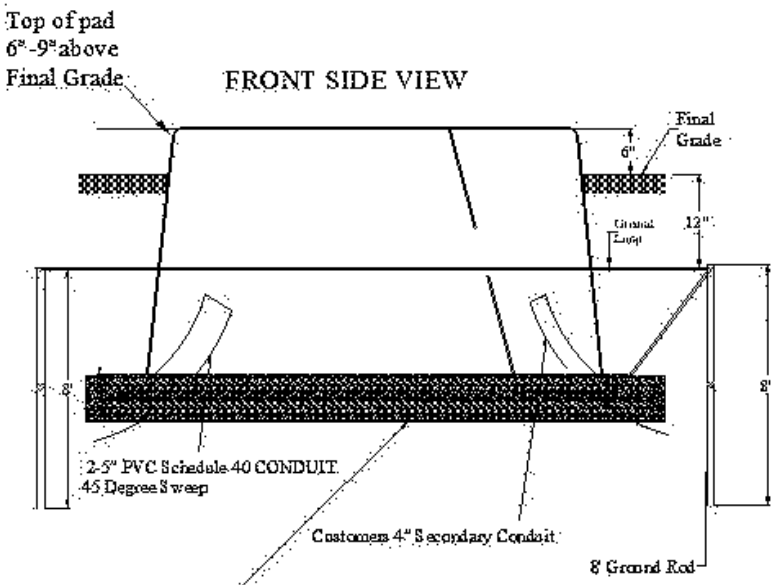

Ground Grid: Install #2 7 strand bare copper wire loop 12" below grade.
Bond to 2 ground rods and leave 16' tail of ground wire from ground rods.

Cadwell connection or two approved connectors per joint.
Install 2 - 8' galvanized steel or copper coated 5/8" ground rods.

Leave grid exposed until inspected by LELD.

Note A

Refer to "Appendix F" for meter metering specifications when CT's are mounted in secondary cabinet of transformer.

SHEA
CONCRETE PRODUCTS

LITTLETON ELECTRIC LIGHT DEPARTMENT
2585 TRANSFORMER VAULT
84" X 96" X 36" OD

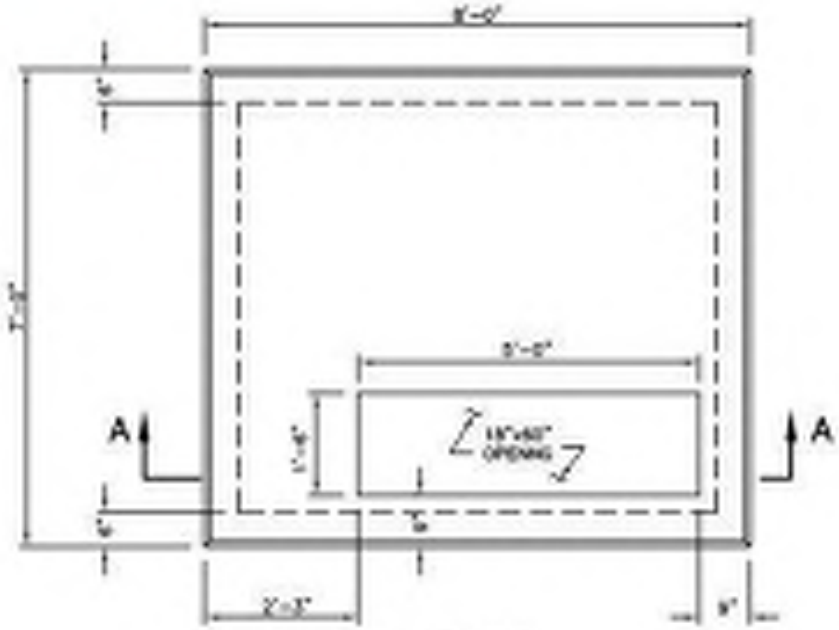

PLAN



SECTION A–A

NOTES:

1. CONCRETE: 5,000 PSI MINIMUM AFTER 28 DAYS.
2. DESIGN LOADING: AASHTO HS20–44, 0 TO 5 FEET COVER.
3. DESIGN SPECIFICATIONS – ACI 318 & AASHTO LOAD FACTOR DESIGN METHOD.
4. STEEL REINFORCEMENT CONFORMS TO ASTM A615, GRADE 60. MINIMUM COVER 1".

SHEA PRODUCT ID: LELD2585TV	FILE NAME: LELD 2585 VAULT			
WEIGHT (LBS): 8900	DRAWN BY: L.P.	DATE: 7/23/2020	PAGE: 1 OF 1	

315 Salem Street • Wilmington, MA | 163 Cranberry Hwy • Rochester, MA | 87 Haverhill Road • Amesbury, MA | 160 Ore Turnpike Rd • Hollingham, NH

Appendix F- Metering from Padmount Transformer Specifications

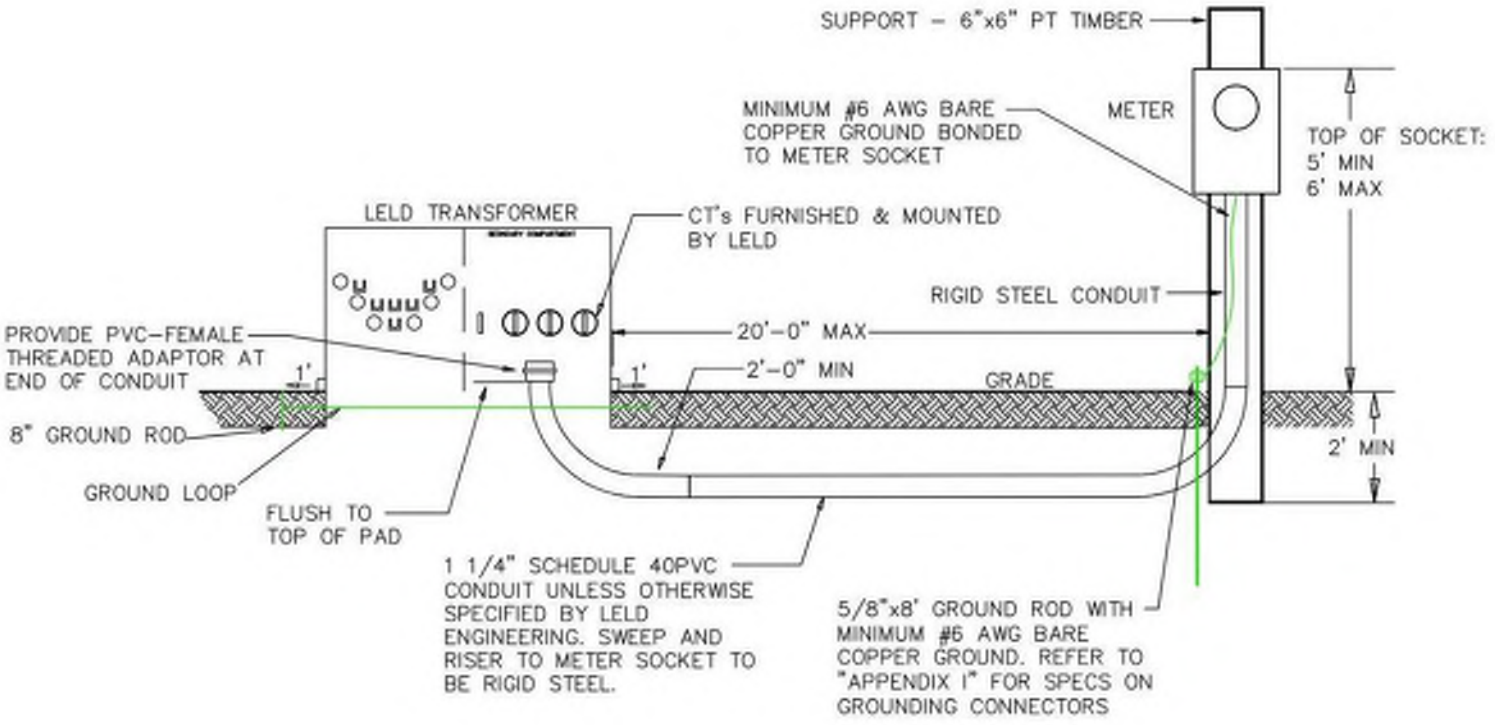

NOTES:
1. REFER TO APPENDIX D & E DETAILS FOR LOCATION OF CONDUIT IN PAD.
2. METER SOCKET LOCATION TO BE APPROVED BY LELD ENGINEERING.

LITTLETON ELECTRIC LIGHT DEPARTMENT
SINGLE PHASE JUNCTION CABINET

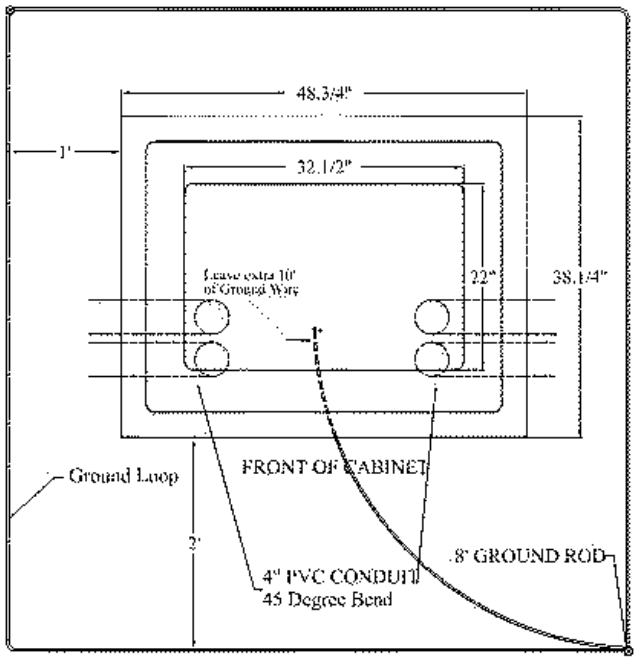

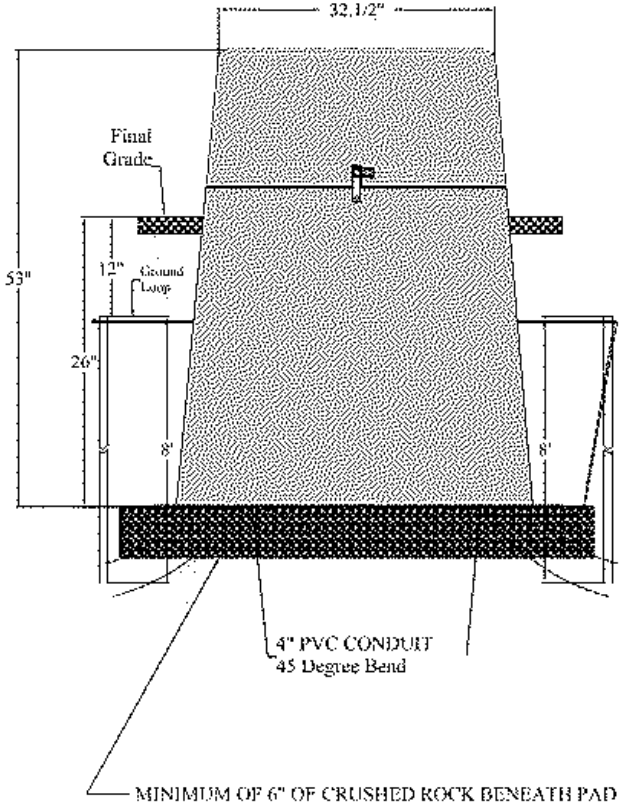

Ground Grid: Install #2 7 strand bare copper wire loop 12" below grade.
Bond to 2 ground rods and leave 10' tail of ground wire from ground rods.

Cadwell connection or two approved connectors per joint.
Install 2 - 8' galvanized steel or copper coated 5/8" ground rods.

Leave grid exposed until inspected by LELD.

DO NOT DRILL ANY HOLES INTO PAD

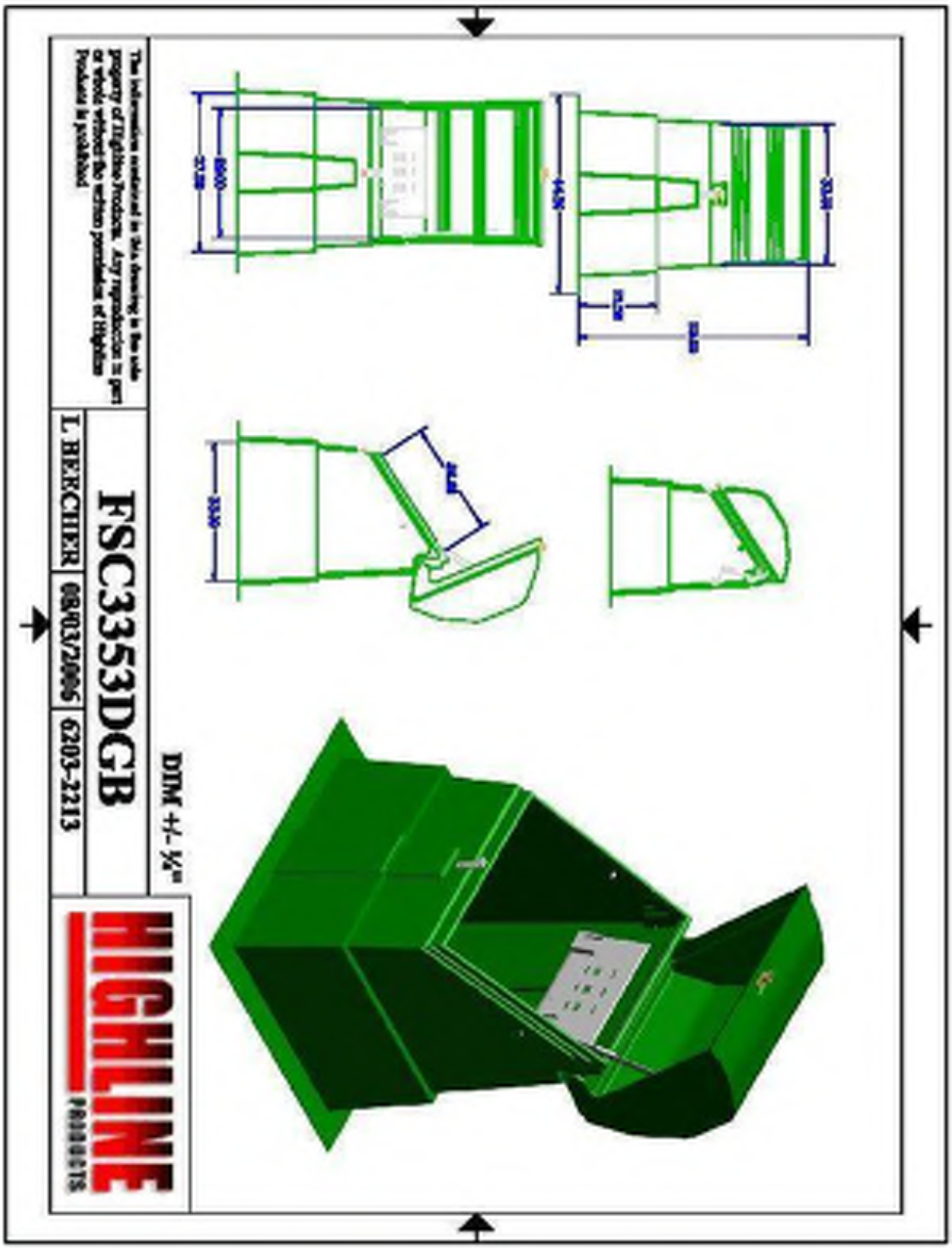
HIGHLINE
PRODUCTS
FSC3353DGB
DIM +/- ½"
L HERCHER
08/03/2006
6203-2213

Appendix H- Three Phase Junction Cabinet Specification

LITTLETON ELECTRIC LIGHT DEPARTMENT
THREE PHASE JUNCTION CABINET

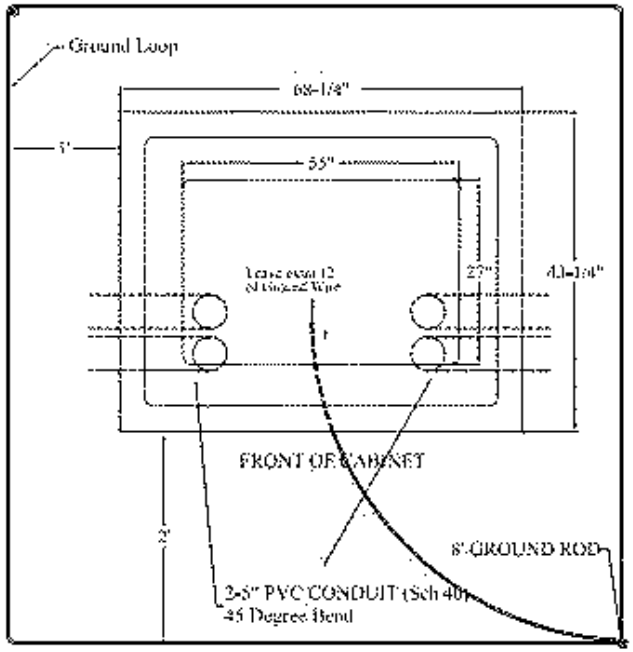

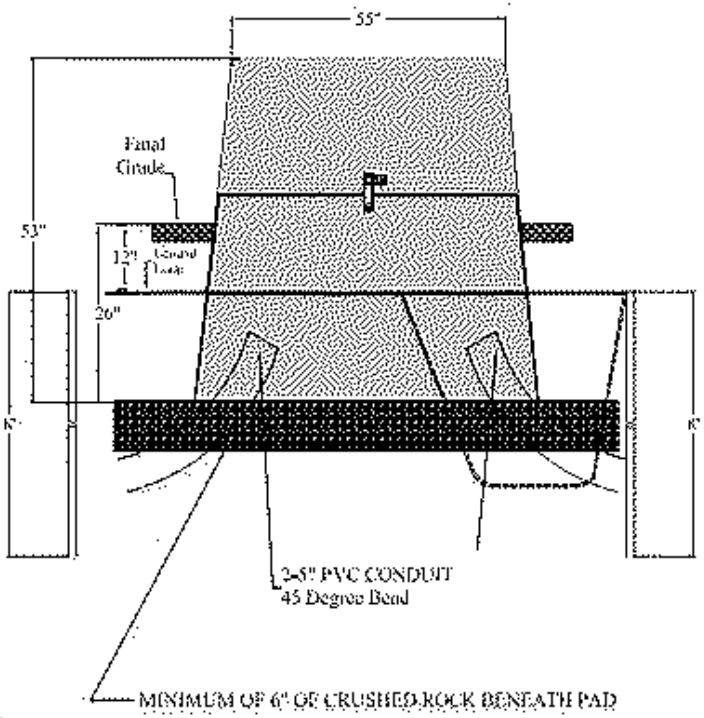

Ground Grid: Install #2 7 strand bare copper wire loop 12" below grade.
Bond to 2 ground rods and leave 12' tail of ground wire from ground rods.

Cadwell connection or two approved connectors per joint:
Install 2 - 8' galvanized steel or copper coated 5/8" ground rods.

DO NOT DRILL ANY HOLES INTO PAD

Leave grid exposed until inspected by LELD.

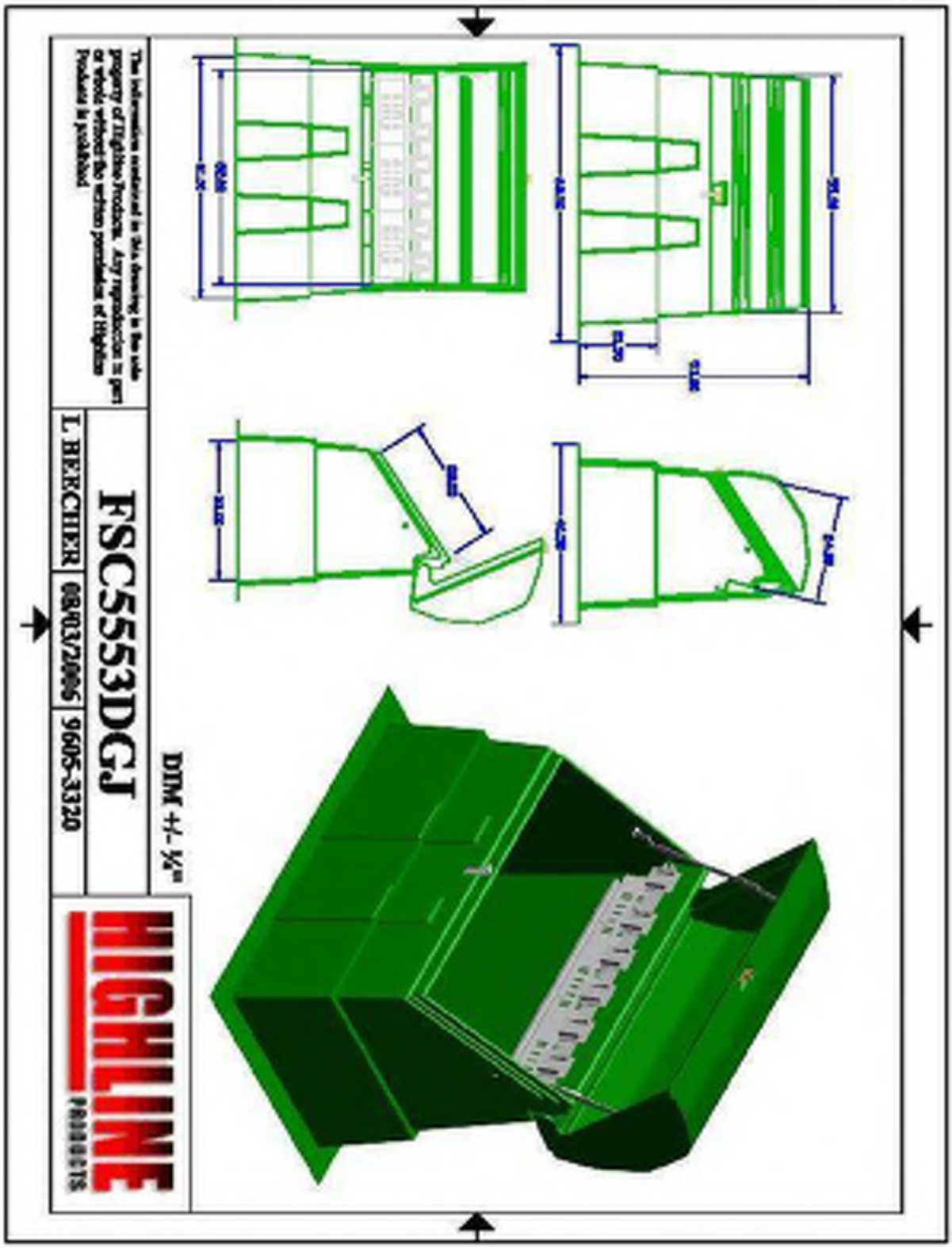
DIM +/- ¼"
FSC5553DGJ
L HERCHER
08/03/2006
9605-3320
HIGHLINE
PRODUCTS

Appendix I- Secondary Pedestal Specification

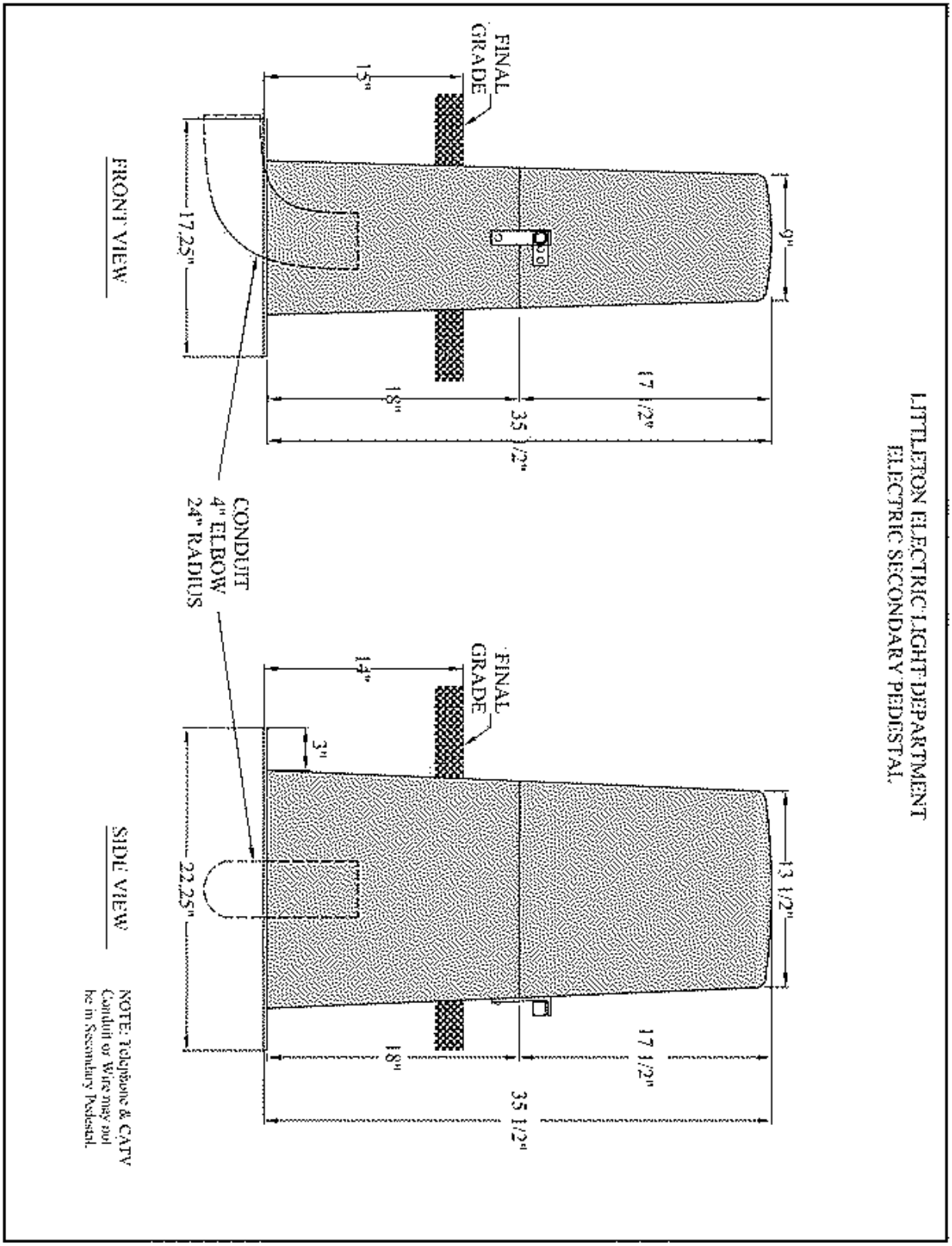

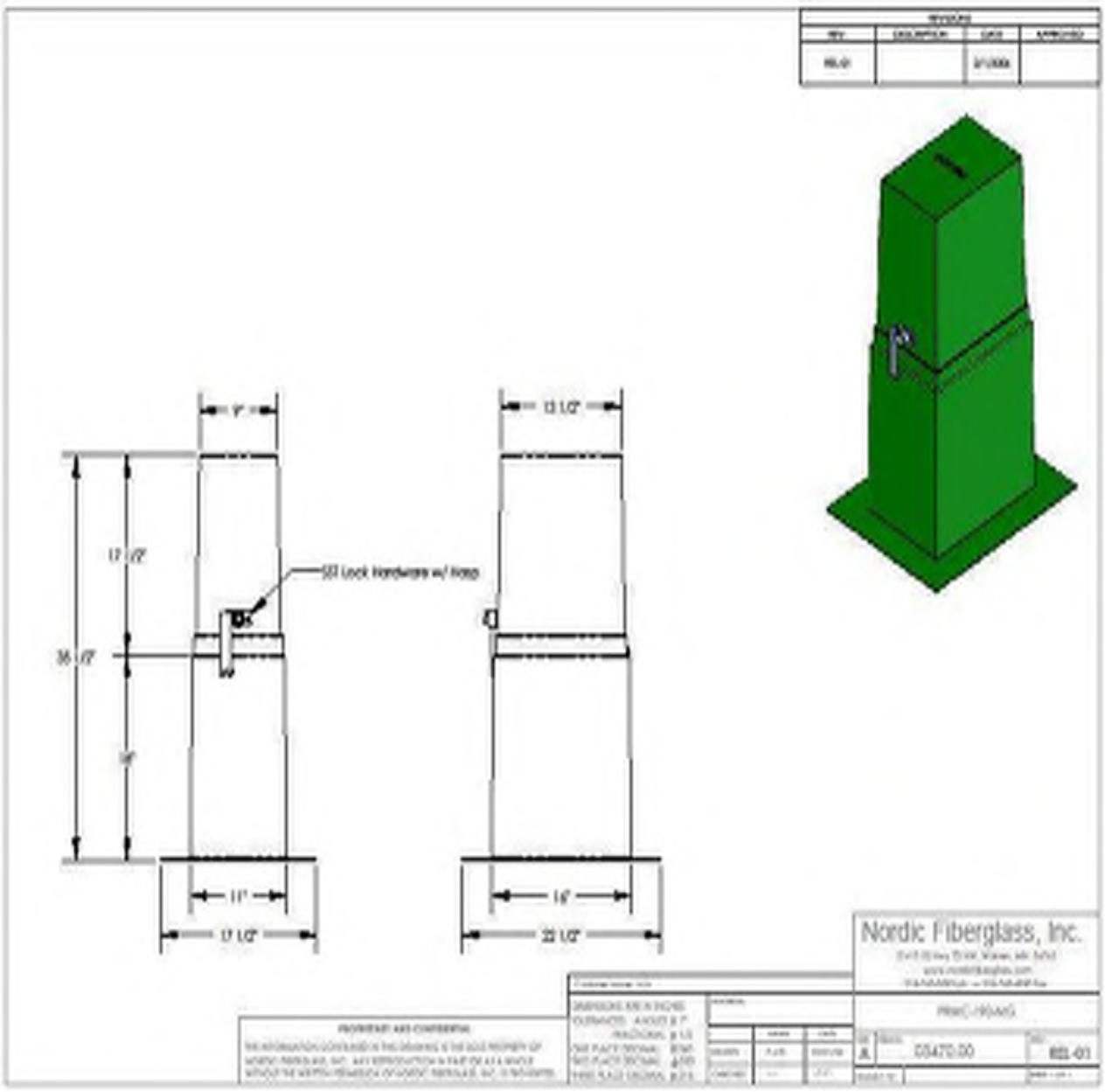
Nordic Fiberglass, Inc.
03470.00
801-01

Appendix J- Padmount Equipment Clearances

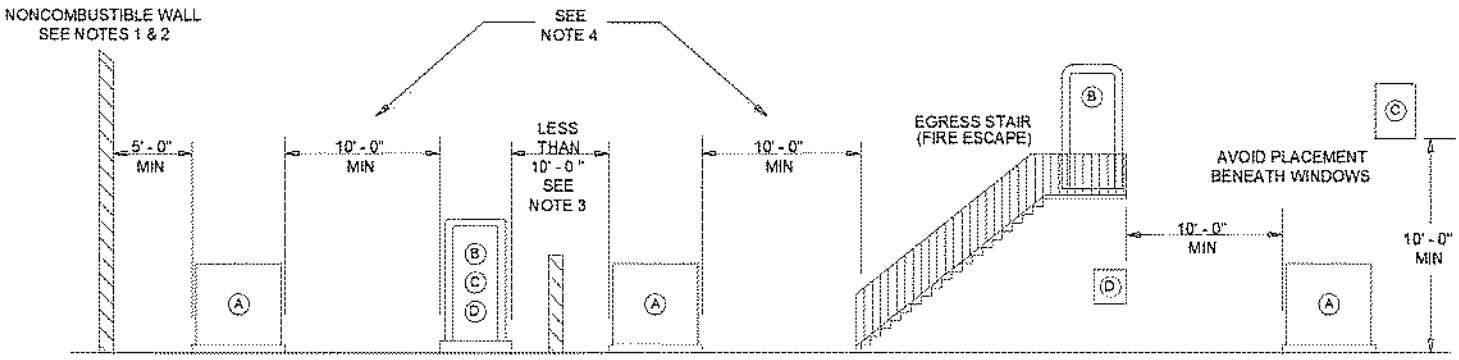

LEGEND

Ⓐ EQUIPMENT, OIL INSULATED
Ⓑ DOOR
Ⓒ WINDOW, OPERABLE
Ⓓ HVAC DUCT

Notes:

3. Noncombustible material is defined as a material that will not ignite, burn, support combustion, or release flammable vapors when subjected to fire or heat (nfpa 220-1979).
4. Building or any element of a building structure shall not overhang any part of the padmounted equipment.
5. When minimum required distance cannot be met, a noncombustible barrier, of minimum 6' height shall be constructed.
6. The minimum clearance of 10' shall be increased to 25' for exits from places of public assembly, such as an auditorium.

Appendix K- Grounding Connectors

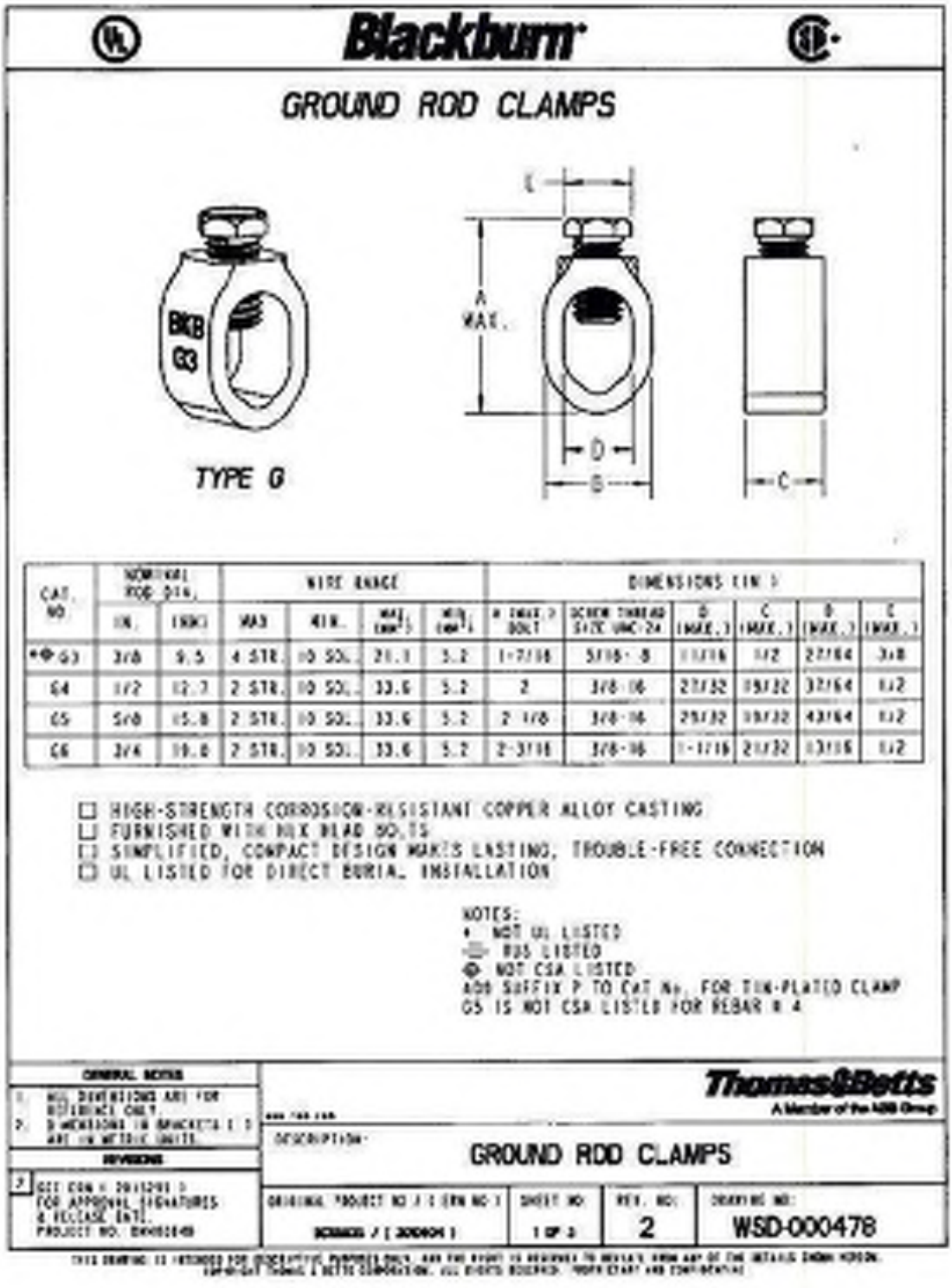

Blackburn

GROUND ROD CLAMPS

TYPE G

CAT. NO.	NOMINAL ROD DIA. IN.	NOMINAL ROD DIA. (MM)	WIRE RANGE MAX	WIRE RANGE MIN.	WIRE RANGE MAX (MM²)	WIRE RANGE MIN (MM²)	DIMENSIONS (IN.) A (MAX.) BOLT	SCREW THREAD SIZE UNC-2A	D (MAX.)	C (MAX.)	B (MAX.)	E (MAX.)
*◆G3	3/8	9.5	4 STR.	#8 SOL.	21.1	5.2	1-7/16	5/16-18	11/16	1/2	27/64	3/8
G4	1/2	12.7	2 STR.	#8 SOL.	33.6	5.2	2	3/8-16	27/32	19/32	37/64	1/2
G5	5/8	15.8	2 STR.	#8 SOL.	33.6	5.2	2 1/8	3/8-16	29/32	19/32	43/64	1/2
G6	3/4	19.0	2 STR.	#8 SOL.	33.6	5.2	2-3/16	3/8-16	1-1/16	21/32	13/16	1/2

- ☐ HIGH-STRENGTH CORROSION-RESISTANT COPPER ALLOY CASTING
- ☐ FURNISHED WITH HEX HEAD BOLTS
- ☐ SIMPLIFIED, COMPACT DESIGN MAKES LASTING, TROUBLE-FREE CONNECTION
- ☐ UL LISTED FOR DIRECT BURIAL INSTALLATION

NOTES:
* NOT UL LISTED
◆ NOT CSA LISTED
ADD SUFFIX P TO CAT No. FOR TIN-PLATED CLAMP
G5 IS NOT CSA LISTED FOR REBAR # 4

GENERAL NOTES
1. ALL DIMENSIONS ARE FOR REFERENCE ONLY.
2. DIMENSIONS IN BRACKETS [ ] ARE IN METRIC UNITS.

REVISIONS
J GCC ECN # 20152981 FOR APPROVAL SIGNATURES & RELEASE ENT. PROJECT NO. BH0010149

Thomas&Betts
A Member of the ABB Group

DESCRIPTION: GROUND ROD CLAMPS

ORIGINAL PROJECT NO / (ERN NO)	SHEET NO	REV. NO.	DRAWING NO.
BCH0005 / (3000474)	1 OF 3	2	WSD-000478

THIS DRAWING IS PROVIDED FOR INFORMATIVE PURPOSES ONLY AND THE RIGHT IS RESERVED TO REVISE AT ANY TIME ANY OF THE DETAILS SHOWN HEREON. COPYRIGHT THOMAS & BETTS CORPORATION. ALL RIGHTS RESERVED. UNAUTHORIZED COPY AND DISTRIBUTION

Appendix L- Single Phase Bollard Specification

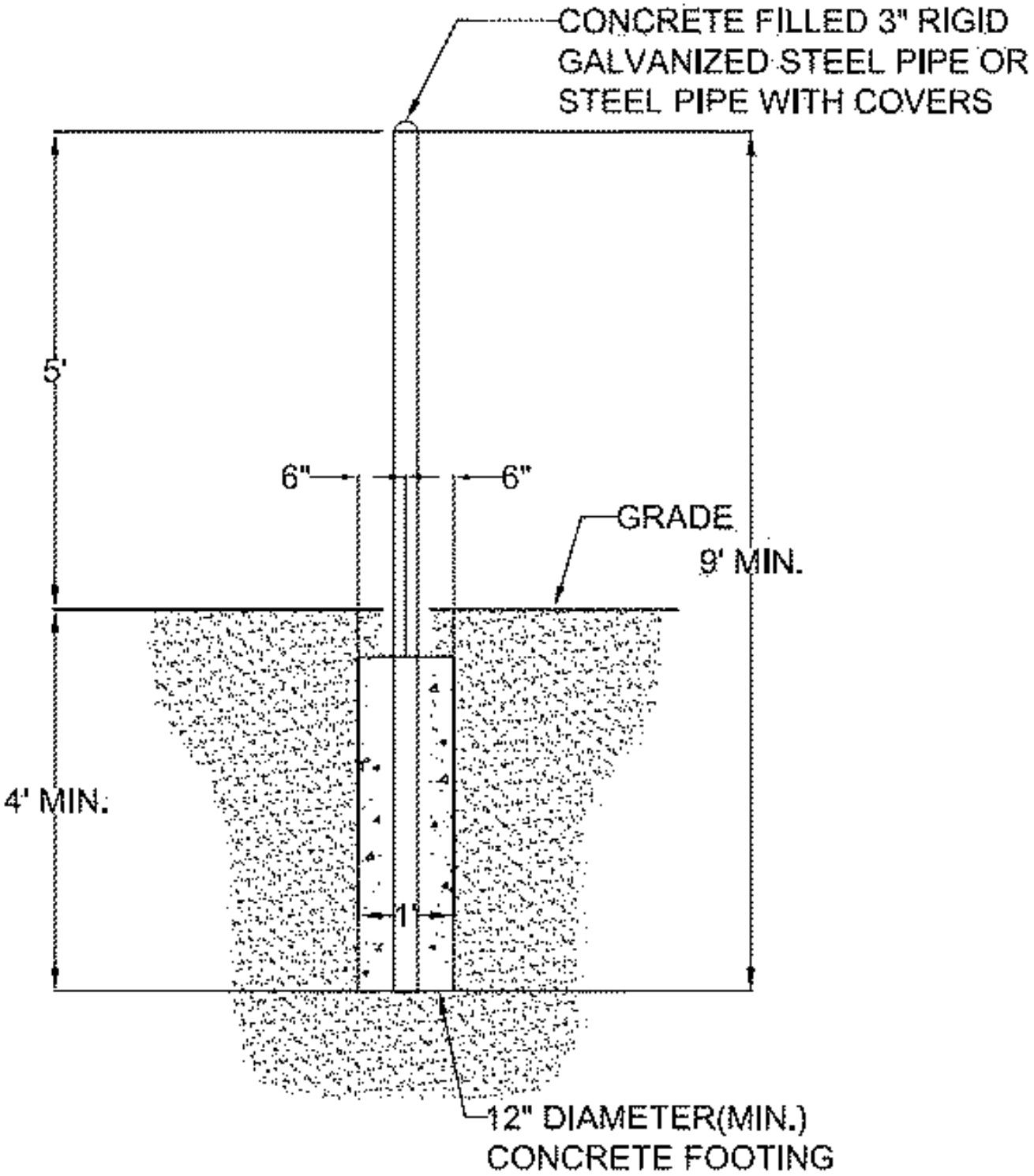

Appendix M- Three Phase Bollard Specification

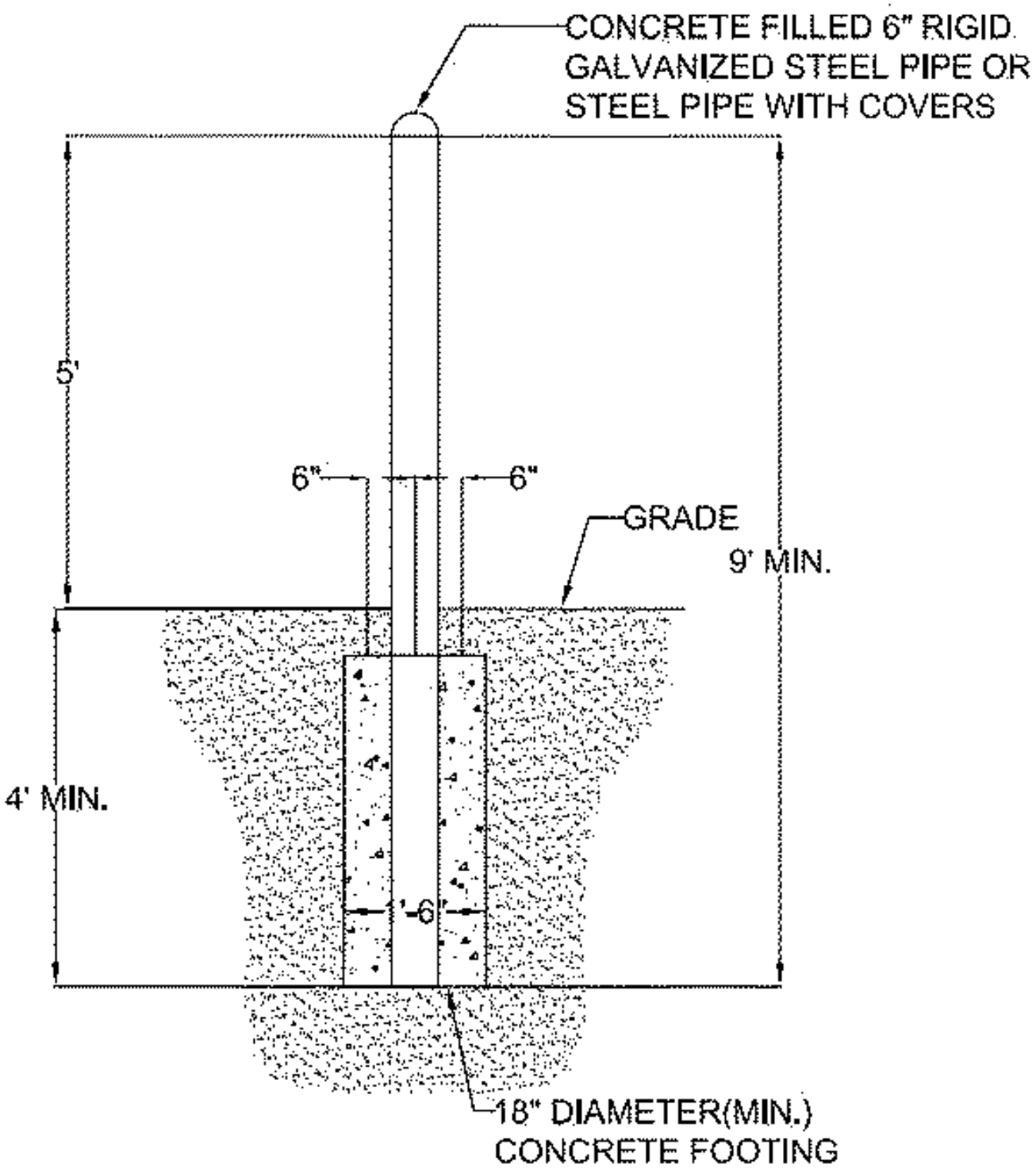

Appendix N- General Bollard Layout for Padmount Equipment

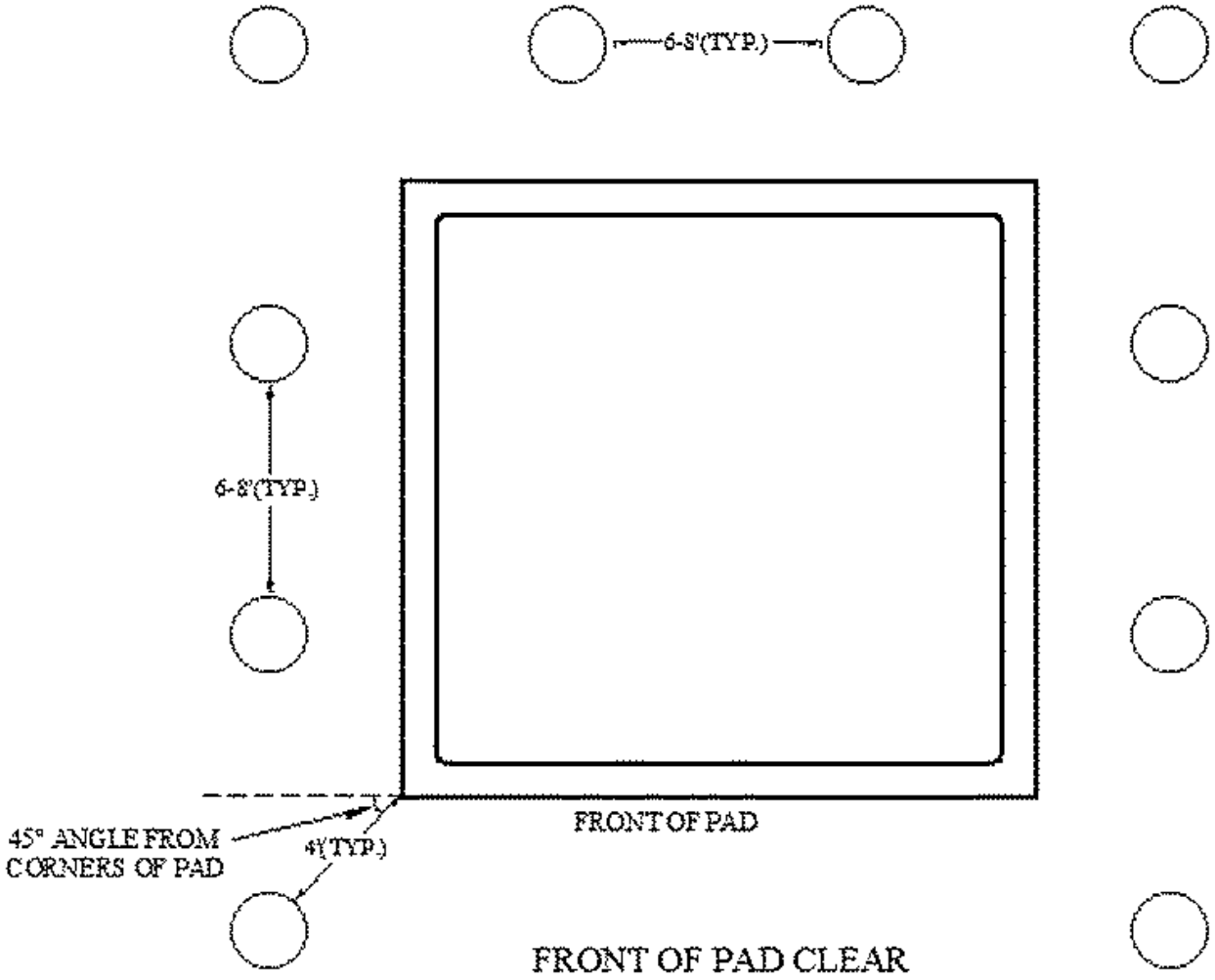

NOTES

- REFER TO APPENDIX L & M FOR BOLLARD DETAILS
- BOLLARDS ONLY REQUIRED ON SIDES SUBJECT TO VEHICULAR TRAFFIC
- EXACT BOLLARD PLACEMENT TO BE DECIDED IN FIELD BY LELD
- 4' 45 CORNER CLEARANCE

Appendix O- Riser Pole Specification

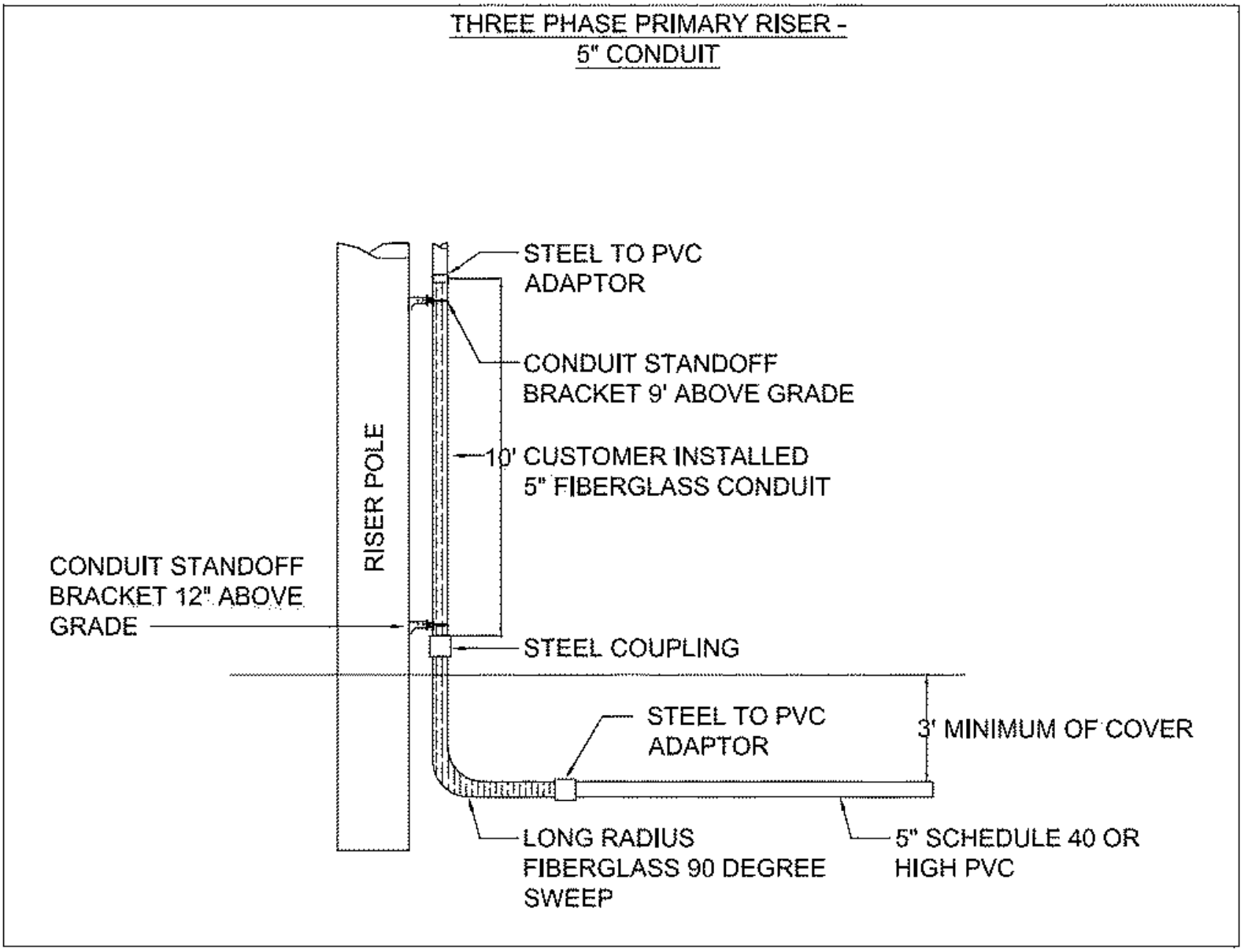

SINGLE PHASE PRIMARY RISER
- 4" CONDUIT

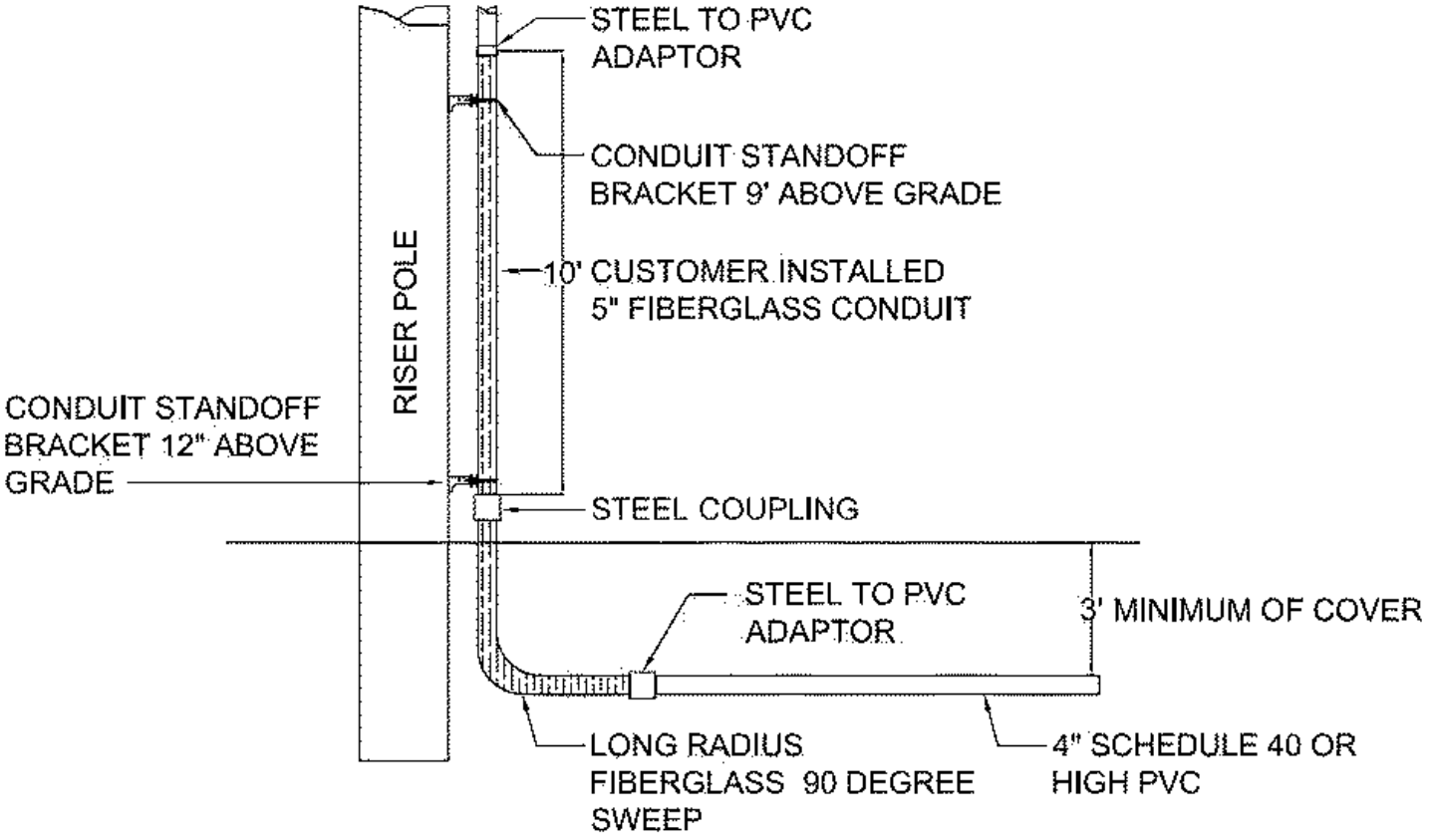

Appendix P- CT Metering Enclosure

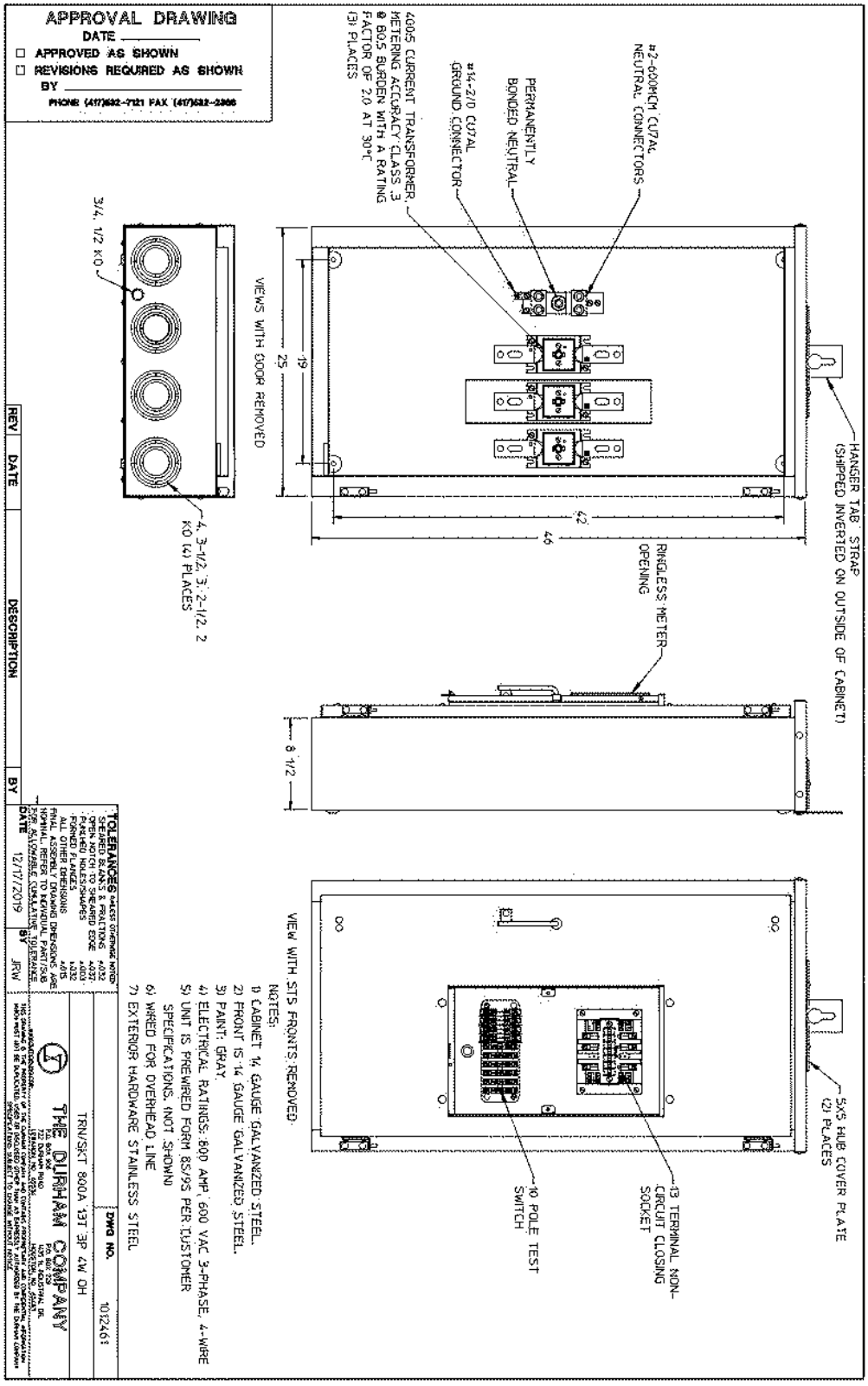

Appendix Q- Underground Street Lighting Pole Specifications



OVERALL LENGTH	MOUNTING HEIGHT	BURIAL DEPTH	TIP DIAMETER	GROUNDLINE DIAMETER	WEIGHT
13	10	3	4.1	5.4	26
14	11	3	4.1	5.6	29
15	12	3	4.1	5.7	31
16	13	3	4.1	5.8	34
18	14	4	4.1	5.9	37
19	15	4	4.1	6.1	38
20	16	4	4.1	6.2	42
21	17	4	4.1	6.3	45
22	18	4	4.1	6.5	49
23	19	4	4.1	6.6	51
24	20	4	4.1	6.7	52

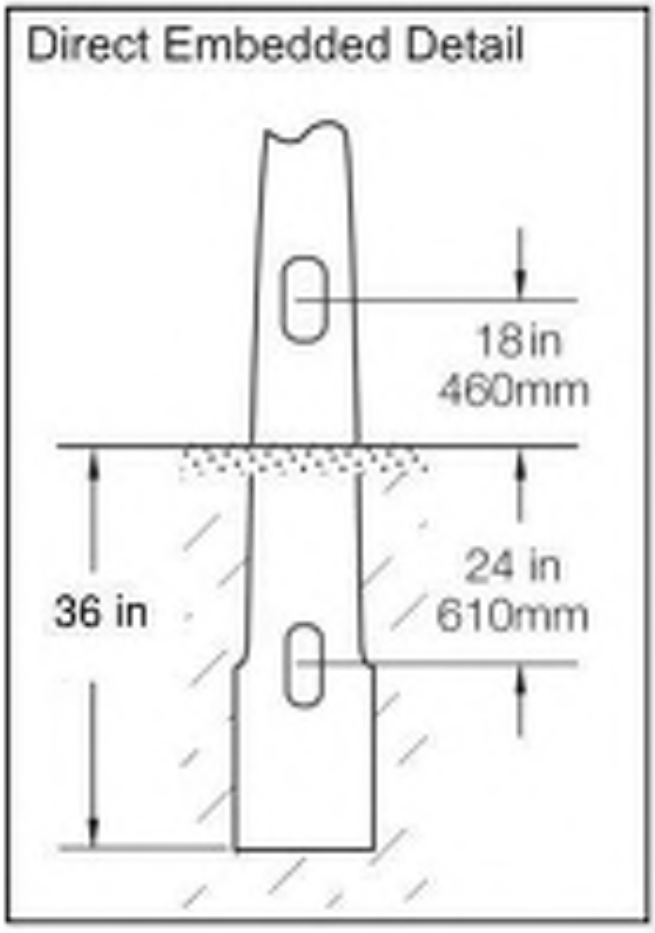

Appendix R – Overhead Service Clearance Guidelines

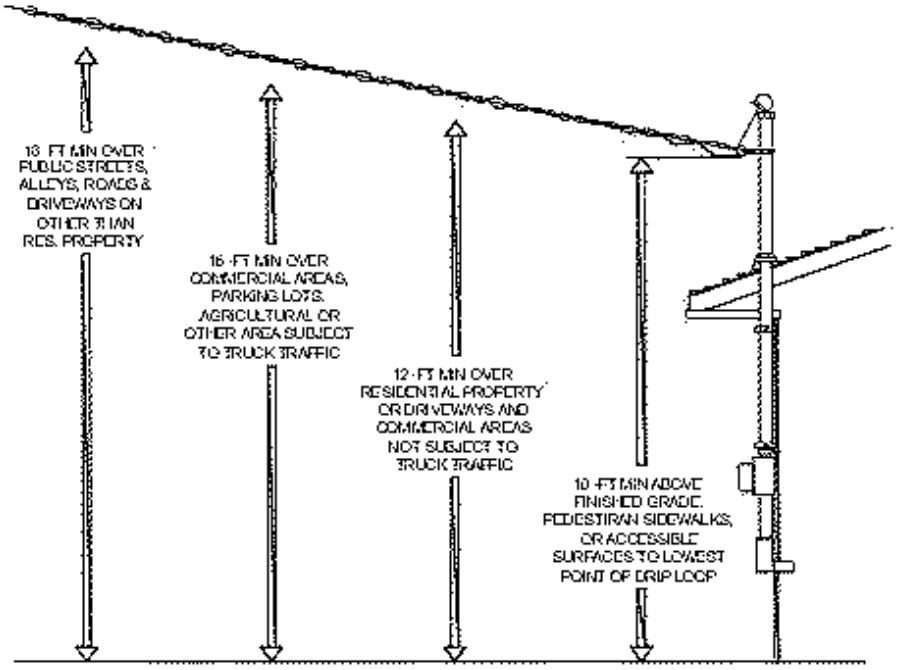

SERVICE DROP CLEARANCE TO GROUND

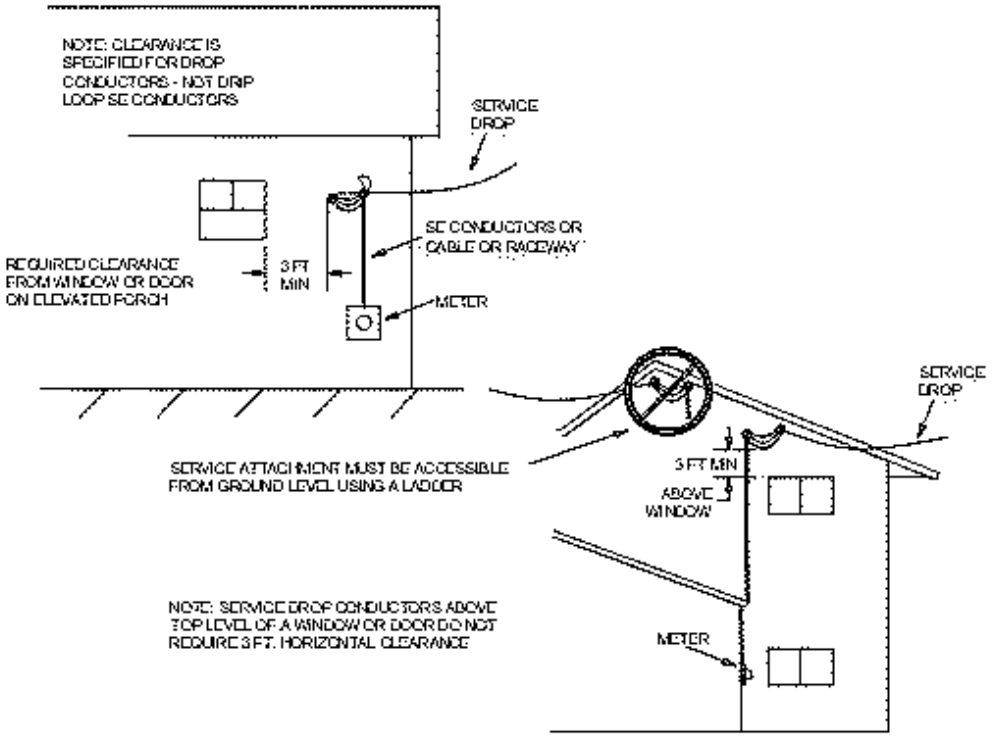

Appendix S - Temporary Service Guidelines

Temporary Utility Service Drop

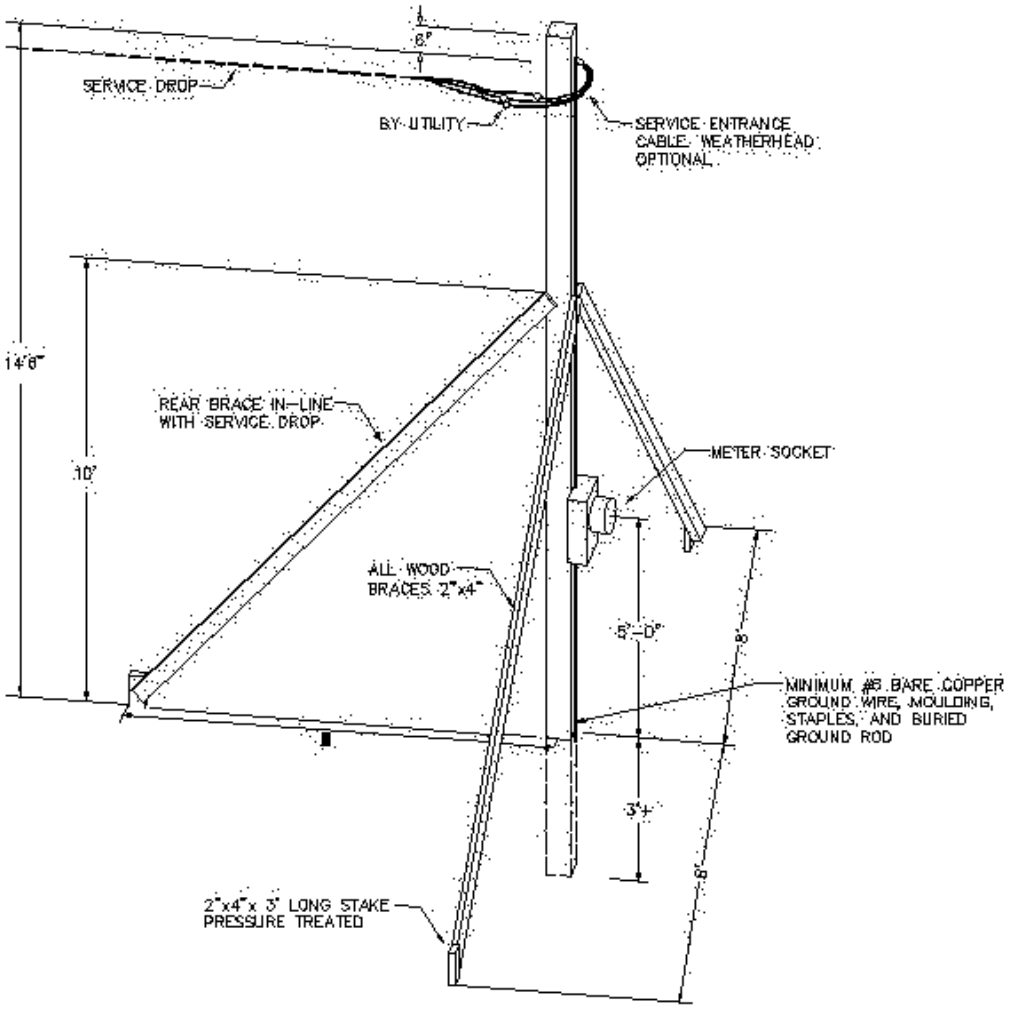

Notes:

1. All temporary utility service drops must be approved by LELD and the town wiring inspector.

Appendix T –Metering Cabinet Vaults

SHEA CONCRETE PRODUCTS
New England's Premier Precaster
800-696-7432 (SHEA)
www.sheaconcrete.com
MAILING ADDRESS: 87 HAVERHILL RD AMESBURY, MA 01913

LITTLETON ELECTRIC DEPARTMENT
METER VAULT 13
60" X 60" X 38" OD

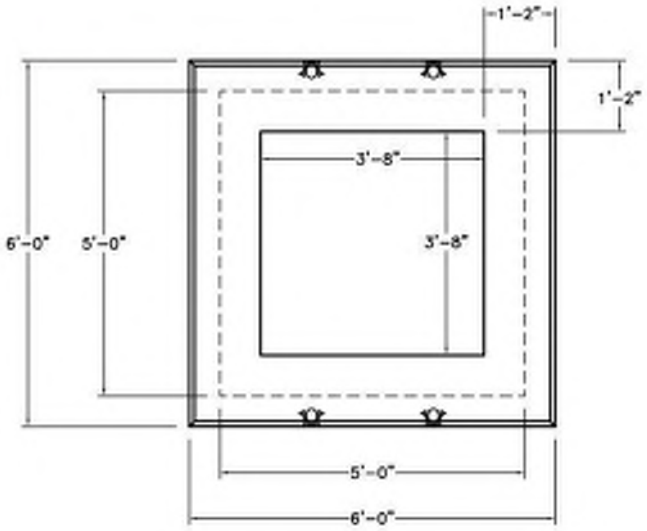

PLAN

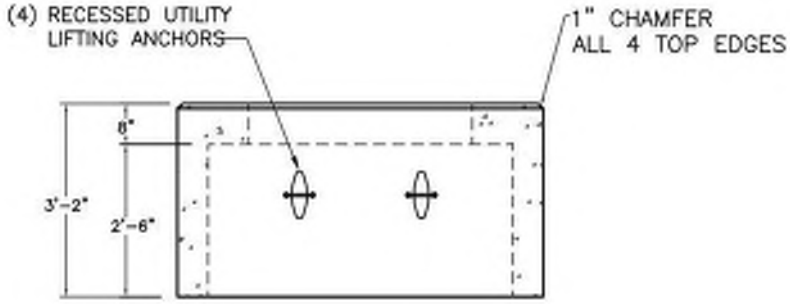

FRONT ELEVATION

NOTES:

1. CONCRETE: 5,000 PSI MINIMUM AFTER 28 DAYS.
2. STEEL REINFORCEMENT CONFORMS TO ASTM A615, GRADE 60.

SHEA PRODUCT ID:	LELD13MV	FILE NAME:	LELD13 METER VAULT		
WEIGHT (LBS):	6,200	DRAWN BY:	L.P.	DATE: 10/19/2026	PAGE: 1 OF 1

773 Salem Street-Wilmington, MA | 153 Cranberry Hwy-Rochester, MA | 87 Haverhill Road-Amesbury, MA | 160 Old Turnpike Rd-Nottingham, NH

Specifications subject to change without notice

SHEA CONCRETE PRODUCTS
New England's Premier Precaster
800-696-7432 (SHEA)
www.sheaconcrete.com
MAILING ADDRESS: 87 HAVERHILL RD AMESBURY, MA 01913

LITTLETON ELECTRIC DEPARTMENT
METER VAULT 25
72" X 96" X 36" OD

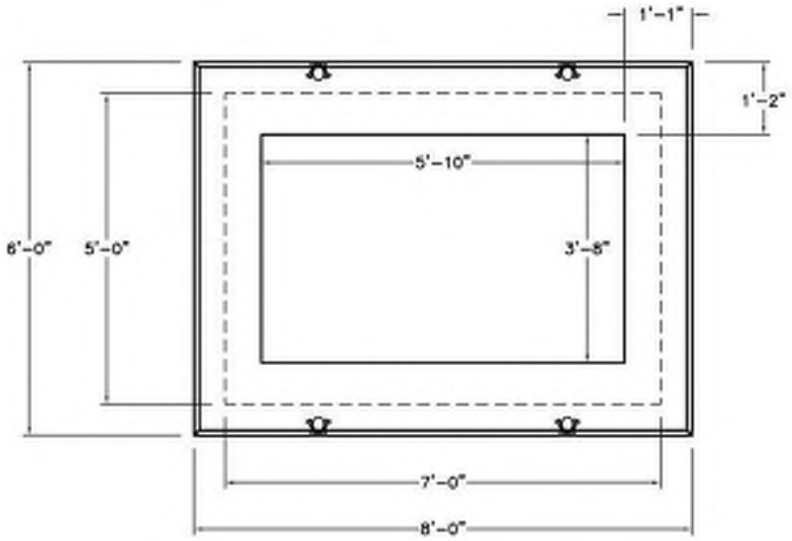

PLAN

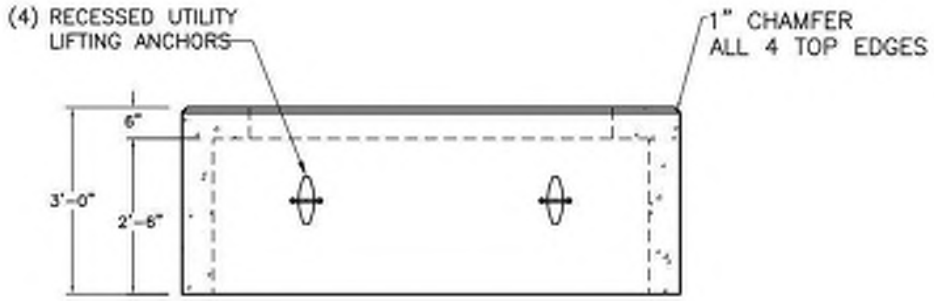

FRONT ELEVATION

NOTES:

1. CONCRETE: 5,000 PSI MINIMUM AFTER 28 DAYS.
2. STEEL REINFORCEMENT CONFORMS TO ASTM A615, GRADE 60.

SHEA PRODUCT ID:	LELD25MV	FILE NAME:	LELD25 METER VAULT		
WEIGHT (LBS):	8,200	DRAWN BY:	L.P.	DATE: 10/14/2026	PAGE: 1 OF 1

NPCA CERTIFIED PLANT

773 Salem Street-Wilmington, MA | 153 Cranberry Hwy-Rochester, MA | 87 Haverhill Road-Amesbury, MA | 160 Old Turnpike Rd-Nottingham, NH

Specifications subject to change without notice

Appendix U- Manholes

SHEA CONCRETE PRODUCTS
New England's Premier Precaster
800-696-7432 (SHEA)
www.sheaconcrete.com
MAILING ADDRESS: 87 HAVERHILL RD AMESBURY, MA 01913

MANHOLE 6' X 12' X 7'

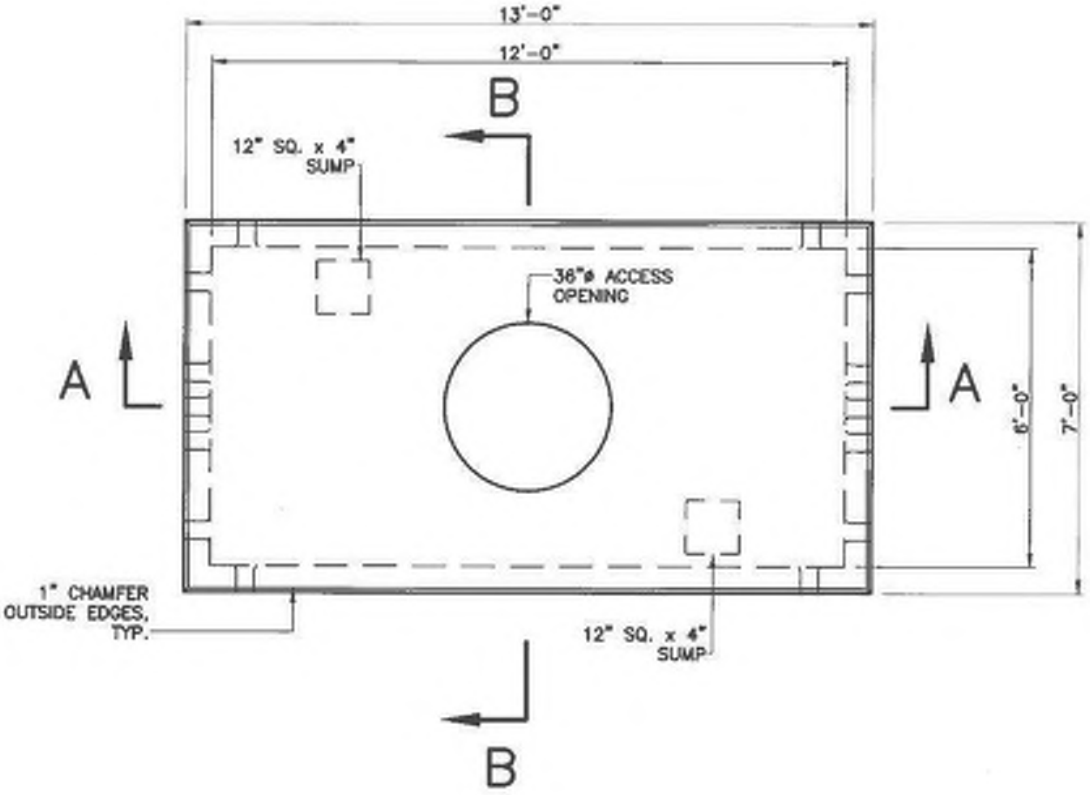

PLAN

NOTES:

1. CONCRETE: 5,000 PSI MINIMUM AFTER 28 DAYS.
2. DESIGN LOADING: AASHTO HS20-44, 0 TO 5 FEET COVER.
3. STEEL REINFORCEMENT CONFORMS TO ASTM A615, GRADE 60.
4. MINIMUM STEEL COVER 1".

SHEA PRODUCT ID:	MH-6127	FILE NAME:	MH 6X12X7		
WEIGHT (LBS):	36880	DRAWN BY: L.P.	DATE: 2/6/2018	PAGE:	I.C.11-1

773 Salem Street-Wilmington, MA | 153 Cranberry Hwy-Rochester, MA | 87 Haverhill Road-Amesbury, MA | 160 Old Turnpike Rd-Nottingham, NH

Specifications subject to change without notice

Appendix V – Inspection Checklist

URD CONDUIT INSPECTION CHECKLIST

Do not back fill BEFORE receiving a conduit system inspection and approval by LELD. Every item below must be inspected and checked off by a LELD representative. Any item found unacceptable must be initialed and rectified by LELD by next inspection.

LELD must be given a minimum of two working days notification in order to inspect the site when approval is required.

N	Y	
		PRE-TRENCH
☐	☐	Final Grade Established
☐	☐	Surface rough graded
☐	☐	Roadways staked
		TRENCH
☐	☐	Minimum 36” depth from finishing grade to top of primary conduit
☐	☐	Minimum 36” wide
☐	☐	Minimum 12” separation between electric conduits and telecommunications
☐	☐	Minimum 60” separation between electric conduits and water, sewer, or gas if placing parallel
☐	☐	Minimum 12” separation between electric conduits and water, sewer, or gas if placing perpendicular
☐	☐	Plastic spacers properly installed no more than every 8’ and at every junction point (or use schedule 80 or concrete encase)
☐	☐	Minimum 24” of compacted sand or concrete encasement (LELD inspector must witness backfilling)
☐	☐	Warning tape installed 12” below finish grade and directly above conduit system
☐	☐	All curves properly formed with forty-five degree couplings
☐	☐	No parallel utilities directly above electrical system
		TRANSFORMER PAD
☐	☐	6” of crushed stone under transformer pad (mechanically compacted for 3 phase)
☐	☐	Pad is level
☐	☐	Top surface of pad 6”-9” above final grade
☐	☐	At least 6” extended PVC through pad
☐	☐	Two ground rods installed at opposite corners of pad – leave exposed for inspection
☐	☐	Ground grid consists of #2 7 strand bare copper wire loop and is

buried 12” below finish grade and placed 12” away from edge of pad

☐ ☐ Bond ground grid to all non-PVC conduit
☐ ☐ 3’-0” of ground grid wire left above pad for grounding transformer
☐ ☐ Correct orientation to road and lot lines
☐ ☐ All non-LELD owned pedestals are a minimum of 2’ away from all sides
☐ ☐ Transformer requires bollard protection

JUNCTION CABINET

☐ ☐ 6” of crushed stone under junction cabinet foundation
☐ ☐ Junction Cabinet covers installed and properly secured with pentahead bolts
☐ ☐ At least 6” extended PVC into junction box
☐ ☐ All non-LELD owned pedestals are a minimum of 2’ away from all sides

RISER POLE

☐ ☐ 90 degree long radius fiberglass sweep and 10’ straight riser pipe galvanized steel conduit.
(4” for single phase, 5” for three phase)
☐ ☐ Steel-PVC adaptor and steel sweep shall not be encased in concrete
☐ ☐ Ground clamp installed with tap
☐ ☐ Standoff hardware installed 12” above finished grade and 12” below the top of the steel conduit

Appendix W – Easement Application Form

LITTLETON ELECTRIC LIGHT DEPARTMENT

GRANT OF EASEMENT

_____

(name and address of Grantor)

_____

(the "Grantor"), for good and valuable consideration and One Dollar ($1.00) paid, the receipt and sufficiency of which are hereby acknowledged, grants to the Town of Littleton, a municipal corporation located in Middlesex County, Massachusetts, acting by and through the Littleton Electric Light Department, 39 Ayer Road, Littleton, Middlesex County, Massachusetts (the "Grantee"), which term shall also refer to any successor in title to the easement rights granted hereunder, with quitclaim covenants, the following perpetual rights and easements:

(a) to lay, install, construct, reconstruct, alter, relocate, repair, replace, add to, remove, operate and maintain:

above ground and underground cables, conduit, wires, poles, anchors and guys, and related equipment and facilities, for the transmission and distribution of electricity and telephone, cable television, data and/or related services (or "distribution of intelligence") , in, through, under, over, across and upon

(Enter legal description of property, book and page number and plan reference as applicable in area below)

_____
_____
_____
_____
_____
_____

and shown on a plan hereinafter specified;

(All of the equipment described in this subparagraph (a) is hereinafter collectively referred to as the "System." All of the easement areas described in subparagraph (a) are hereinafter collectively referred to as the "Easement Areas".)

(b) to use the System for the transmission and distribution of electricity and the transmission and distribution of intelligence to the property of Grantor [and to the property of other customers of Grantee];

(c) to pass and re-pass and to authorize others to pass and re-pass over, across and upon the Easement Areas and other land of Grantor as may be reasonable and necessary in the opinion of Grantee in connection with all of the foregoing purposes;

(d) to make such other installations upon other land of Grantor as may be reasonable and necessary in the opinion of Grantee in connection with all of the foregoing purposes;

(e) to keep the Easement Areas cleared of such trees, shrubs, bushes, structures, objects and surfaces as may in the opinion of Grantee interfere with the safe and efficient operation and maintenance of the System; and

(f) to do all other acts incidental and reasonably necessary to said purposes.

Grantor hereby grants to Grantee all the perpetual rights and easements aforesaid needed to lay, install, construct, reconstruct, alter, relocate, repair, replace, add to, remove, operate and maintain the System for the purposes of transmitting and distributing electricity and intelligence to the property of Grantor shown on said plan [and to the property of other customers of Grantee.] Any entry by Grantee in the exercise of its rights under this Easement shall be at Grantee's sole risk.

The Easement Areas are shown on a plan as follows:

(insert description, attach drawing and exhibit reference)

_____

_____

_____

If the Easement Area is unsuitable for the purposes of the Grantee, then the location(s) of the Easement Area shall be changed to areas mutually satisfactory to both Grantor and Grantee.

The System is further shown on a layout plan showing installation details entitled:

_____

Prepared by _____

And dated _____ on file with Grantee.

[The height of any poles above the finished grade of the Easement Area and the placement of the wires thereon and the placement of cables, wires, anchors and guys shown on said layout shall not be thereafter altered so as to interfere with vehicular access (passenger or commercial) of any currently existing access areas within the Easement Area.]

By Grantee's acceptance hereof, such Grantee agrees that it shall indemnify and hold Grantor harmless from any loss, cost, damage or expense sustained by Grantor as a result of the exercise by such Grantee of the rights and easements granted herein, provided, however, that to the extent that any such loss, cost, damage or expense is attributable to Grantor's negligence or willful misconduct, the foregoing indemnification and hold harmless agreement shall be of no force and effect.

Grantee agrees that following any installations made by such Grantee as permitted by this Grant of Easement, such Grantee shall properly restore the surface of the Easement Areas to as reasonably good condition as said surface was in immediately prior to said installations.

If the System shall no longer be used, and there are no plans of Grantee to restore the System to operational status for the uses specified herein, all of the equipment that is not in operation or held in readiness to resume operations shall be removed by the Grantee which shall also restore the surface of the Easement Areas to as nearly as is practical to the same condition such Easement Areas were in immediately prior to such removal.

The provisions hereof shall inure to the benefit of and be binding upon Grantor, Grantee, and their respective successors in the title forever.

(continued on next page)

FIRST MORTGAGE HOLDER

(name and address of bank)

having its principal place of business in _____

(the "Bank"), holder of a first mortgage on said land of Grantor, _____

(mortgage information)

for good and valuable consideration paid, the receipt and sufficiency of which are hereby acknowledged, hereby joins in this Grant of Easement and agrees with Grantee that Bank shall hold said mortgage and, in the event of foreclosure thereof, the mortgaged premises, subject to the rights and easements contained herein, however, that the rights of Bank under said mortgage shall not otherwise be affected.

For Grantor's title see _____

(continued on next page)

SECOND MORTGAGE HOLDER

(name and address of bank)

_____

having its principal place of business in _____

(the "Bank"), holder of a second mortgage on said land of Grantor, _____

(mortgage information)

for good and valuable consideration paid, the receipt and sufficiency of which are hereby acknowledged, hereby joins in this Grant of Easement and agrees with Grantee that Bank shall hold said mortgage and, in the event of foreclosure thereof, the mortgaged premises, subject to the rights and easements contained herein, however, that the rights of Bank under said mortgage shall not otherwise be affected.

(continued on next page)

IN WITNESS WHEREOF, Grantor has caused this instrument to be signed and delivered in Grantor's name this _____ day of _____, 20____.

_____
(Grantor)

_____
(title)

_____
(print name)

_____

COMMONWEALTH OF MASSACHUSETTS

_____, ss.
(county)

Then personally appeared the above-named _____

_____
(grantor)

and acknowledged the foregoing instrument to be her/his free act and deed,

_____ before me.
(date)

_____
Notary Public
My Commission Expire

IN WITNESS WHEREOF, said _____
has caused its corporate seal to be hereto affixed and this instrument to be signed and delivered in its name and behalf by its duly authorized officers this _____ day of _____, 20____.

_____
(name of bank)

By: _____
(signature)

_____
(print name)

_____
(title)

COMMONWEALTH OF MASSACHUSETTS

_____, ss.
(county)

Then personally appeared the above-named _____

(name of person signing for bank)

and acknowledged the foregoing instrument to be her/his free act and deed,

_____ before me.
(date)

_____
Notary Public
My Commission Expires

IN WITNESS WHEREOF, said _____
has caused its corporate seal to be hereto affixed and this instrument to be signed and delivered in its name and behalf by its duly authorized officers this _____ day of _____, 20____.

_____
(name of bank)

By: _____
(signature)

_____
(print name)

_____
(title)

COMMONWEALTH OF MASSACHUSETTS

_____, ss.
(county)

Then personally appeared the above-named _____

(name of person signing for bank)

and acknowledged the foregoing instrument to be her/his free act and deed,

_____ before me.
(date)

_____
Notary Public
My Commission Expires